Thank you for viewing

ROHR2 – ROHR2FESU- SINETZ

Program Training Material

Published by

SIGMA Ingenieurgesellschaft mbH
Bertha-von-Suttner-Allee 19
D-59423 Unna
Germany
Telephone +49 (0)2303 332 33-0
Telefax +49 (0)2303 332 33-50
E-mail: info@rohr2.de
Internet: www.rohr2.de www.rohr2.com

Contents of this document are subject to change without notice. The manual is protected by copyright.
No part of this document may be reproduced or transmitted in any form or by any means, electronic or mechanical, for any purpose, without permission.
All of the mentioned products and brand names are trademarks or indexed trademarks of the respective manufacturers.

Software-Support, German
++49 (0) 2303 332 33 33
Software-Support, English
++49 (0) 2303 332 33 44
support@rohr2.de

For detailed information please visit us at

www.rohr2.de www.rohr2.com

ROHR2 31.0 beta - Dynamic - [I:\Schul+Präsentation\Tutorials\English\FESU\Tank_Torispherical-head_with_nozzle\Step_0\Step_0.r2w*]

File Edit Properties Loads Results Documentation View Isometry Options Extras Window Help SIGMA

F1 for Help | DN2200.0 ST35.8 PA=16.0bar TA=200°C | 0, 0, 0

Input | Result | Isometry | DN2200.0 | Gewicht | Lc | Tp

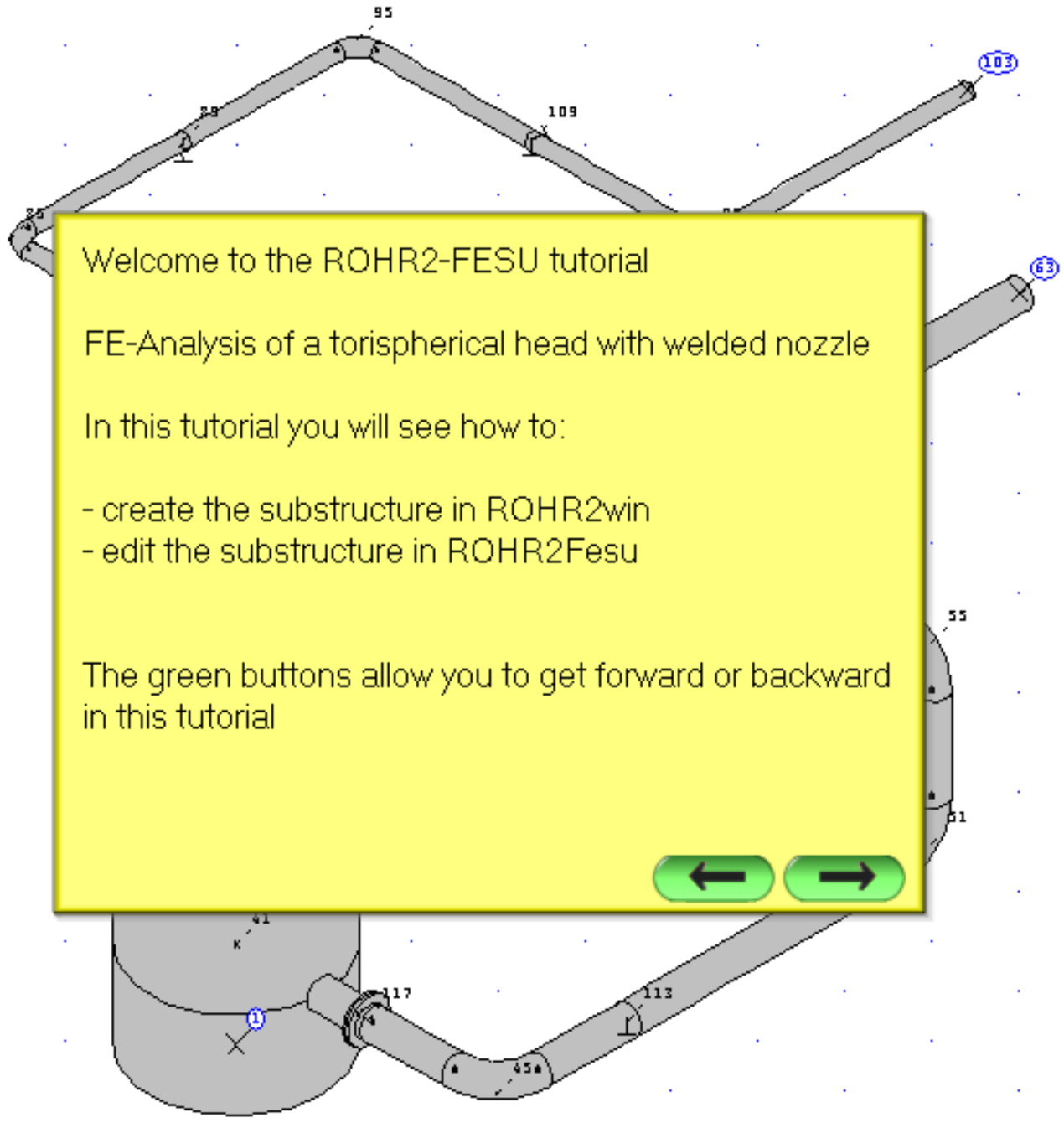

Welcome to the ROHR2-FESU tutorial

FE-Analysis of a torispherical head with welded nozzle

In this tutorial you will see how to:

- create the substructure in ROHR2win
- edit the substructure in ROHR2Fesu

The green buttons allow you to get forward or backward in this tutorial

Calculation output | Output of storing, loading ...

Ready !

ROHR2 31.0 beta - Dynamic - [I:\Schul+Präsentation\Tutorials\English\FESU\Tank_Torispherical-head_with_nozzle\Step_0\Step_0.r2w*]

File Edit Properties Loads Results Documentation View Isometry Options Extras Window Help SIGMA

F1 for Help

DN2200.0 ST35.8 PA=16.0bar TA=200°C

0, 0, 0

Input Result Isometry

DN2200.0

Gewicht

Zoom in

Calculation output Output of storing, loading ...

Ready !

ROHR2 31.0 beta - Dynamic - [I:\Schul+Präsentation\Tutorials\English\FESU\Tank_Torispherical-head_with_nozzle\Step_0\Step_0.r2w*]

File Edit Properties Loads Results Documentation View Isometry Options Extras Window Help SIGMA

F1 for Help

DN2200.0 ST35.8 PA=16.0bar TA=200°C

0, 0, 0

Input Result Isometry

DN2200.0

Gewicht

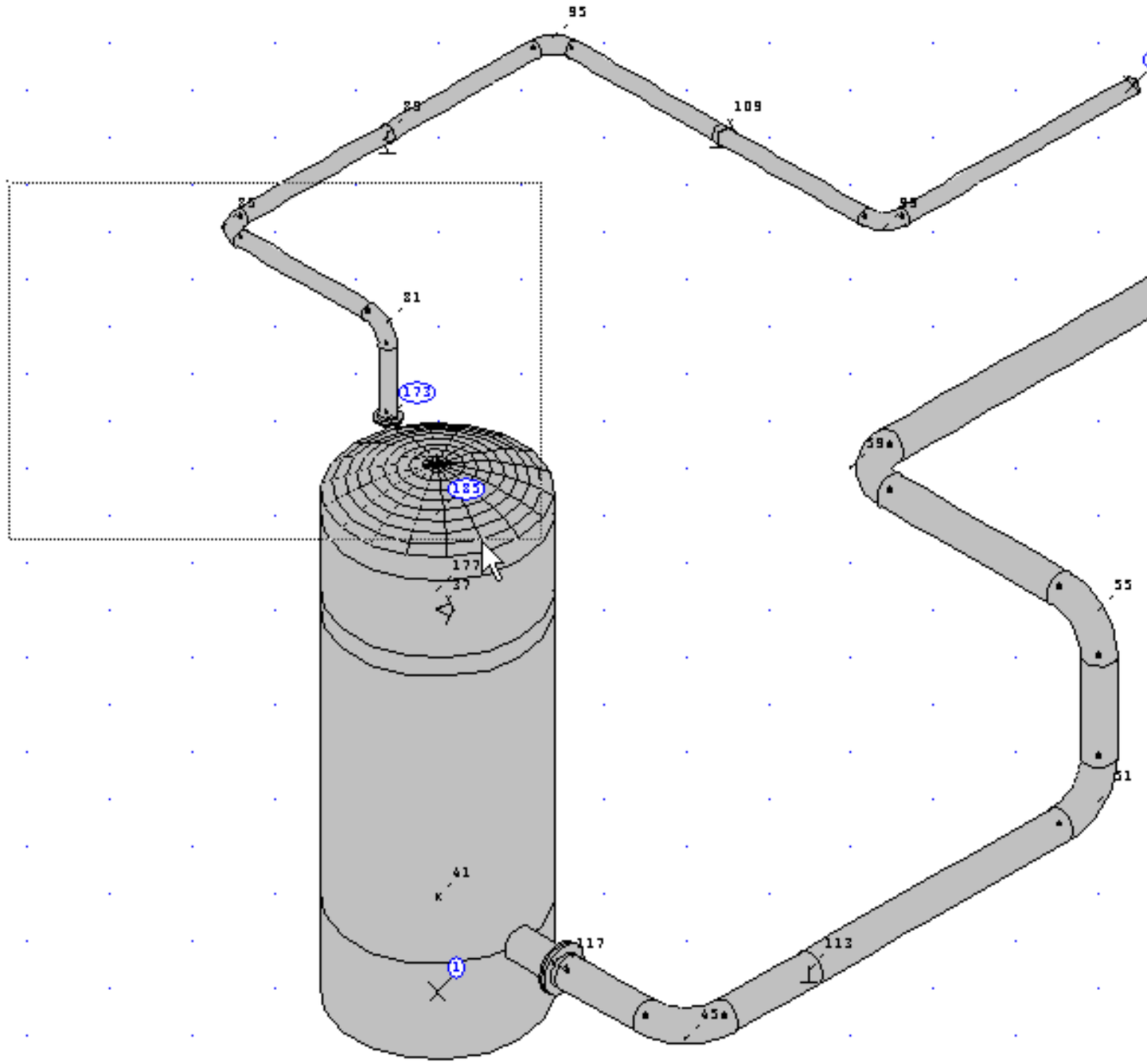

Txt Txt XYZ Txt Txt Bmp Meta file HP GL

Calculation output | Output of storing, loading ...

Ready !

Za Ya Xa

ROHR2 31.0 beta - Dynamic - [I:\Schul+Präsentation\Tutorials\English\FESU\Tank_Torispherical-head_with_nozzle\Step_0\Step_0.r2w*]

File Edit Properties Loads Results Documentation View Isometry Options Extras Window Help SIGMA

F1 for Help

DN2200.0 ST35.8 PA=16.0bar TA=200°C

0, 0, 0

Input Result Isometry

DN2200.0

Gewicht

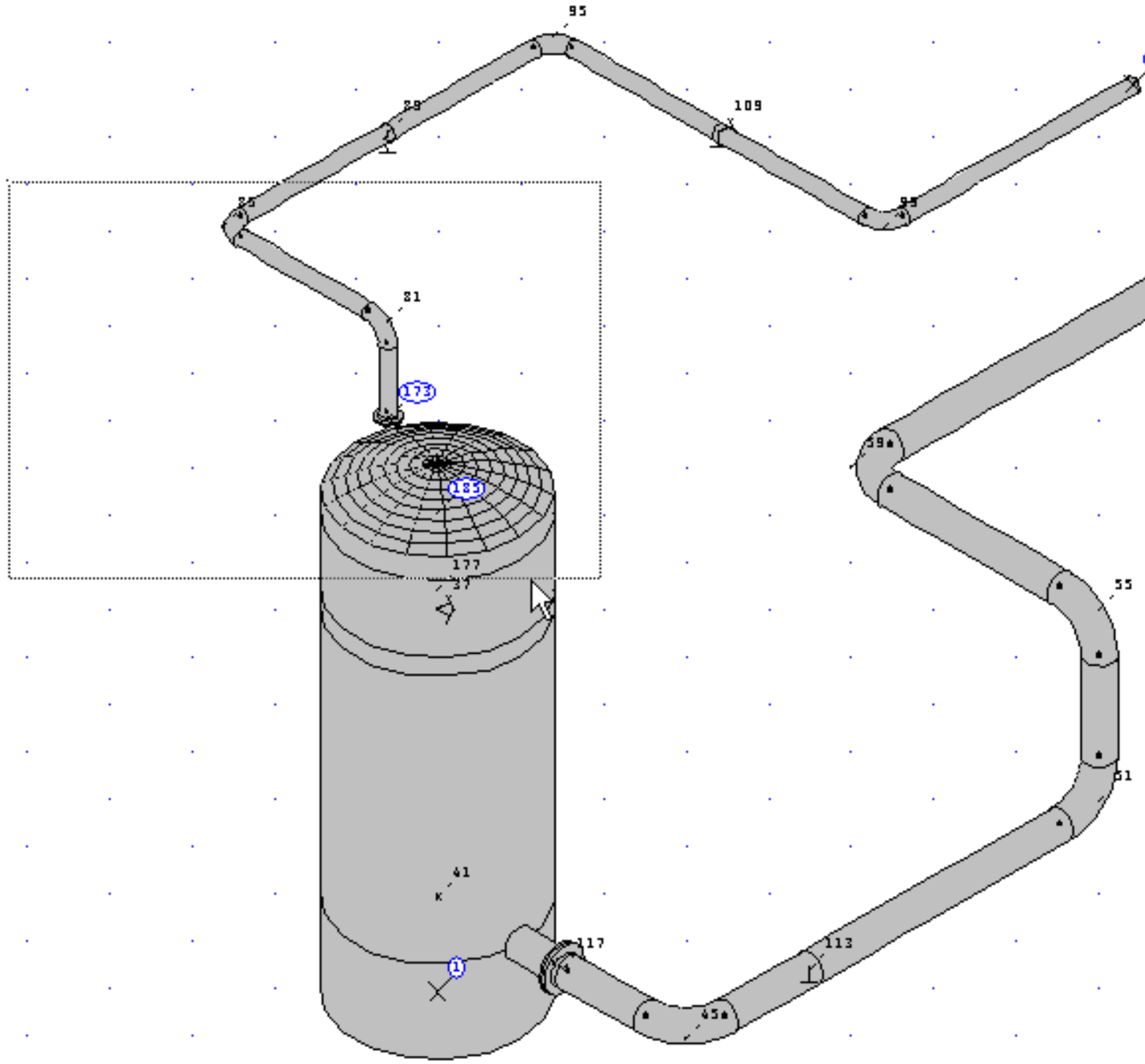

Txt Txt XYZ Txt Txt Bmp Meta file HP GL

Calculation output | Output of storing, loading ...

Ready!

Za Ya Xa

5°

ROHR2 31.0 beta - Dynamic - [I:\Schul+Präsentation\Tutorials\English\FESU\Tank_Torispherical-head_with_nozzle\Step_0\Step_0.r2w*]

File Edit Properties Loads Results Documentation View Isometry Options Extras Window Help SIGMA

F1 for Help

DN2200.0 ST35.8 PA=16.0bar TA=200°C

0, 0, 0

Input Result Isometry

DN2200.0

Gewicht

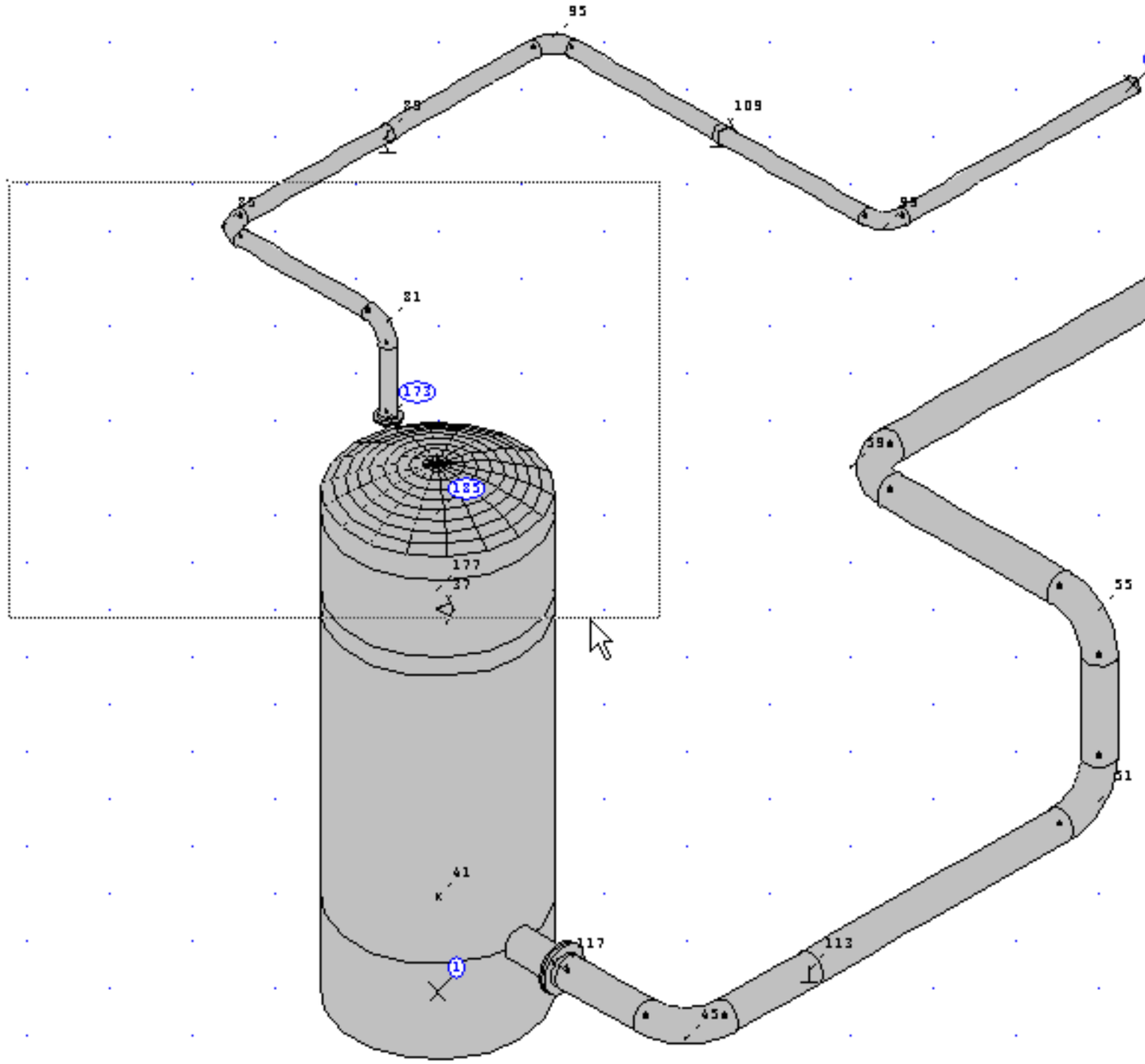

Txt Txt XYZ Txt Txt Bmp Meta file HP GL

Calculation output | Output of storing, loading ...

Ready!

Za Ya Xa

5°

ROHR2 31.0 beta - Dynamic - [I:\Schul+Präsentation\Tutorials\English\FESU\Tank_Torispherical-head_with_nozzle\Step_0\Step_0.r2w*]

File Edit Properties Loads Results Documentation View Isometry Options Extras Window Help SIGMA

F1 for Help

DN2200.0 ST35.8 PA=16.0bar TA=200°C

0, 0, 0

Input Result Isometry

DN2200.0

Gewicht

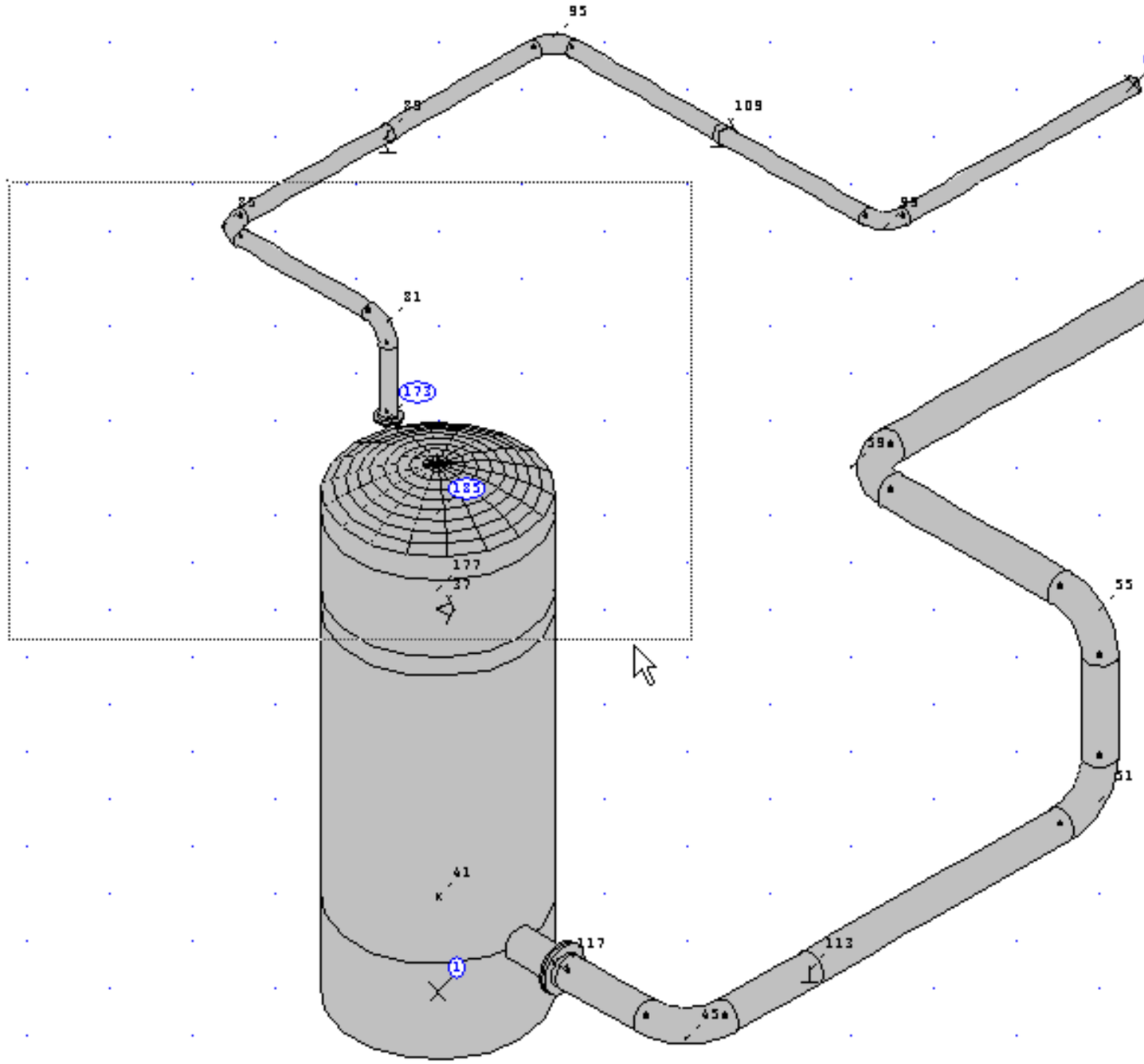

Calculation output | Output of storing, loading ...

Ready!

Za Ya Xa

ROHR2 31.0 beta - Dynamic - [I:\Schul+Präsentation\Tutorials\English\FESU\Tank_Torispherical-head_with_nozzle\Step_0\Step_0.r2w*]

File Edit Properties Loads Results Documentation View Isometry Options Extras Window Help SIGMA

F1 for Help

DN2200.0 ST35.8 PA=16.0bar TA=200°C

0, 0, 0

Input Result Isometry

DN2200.0

Gewicht

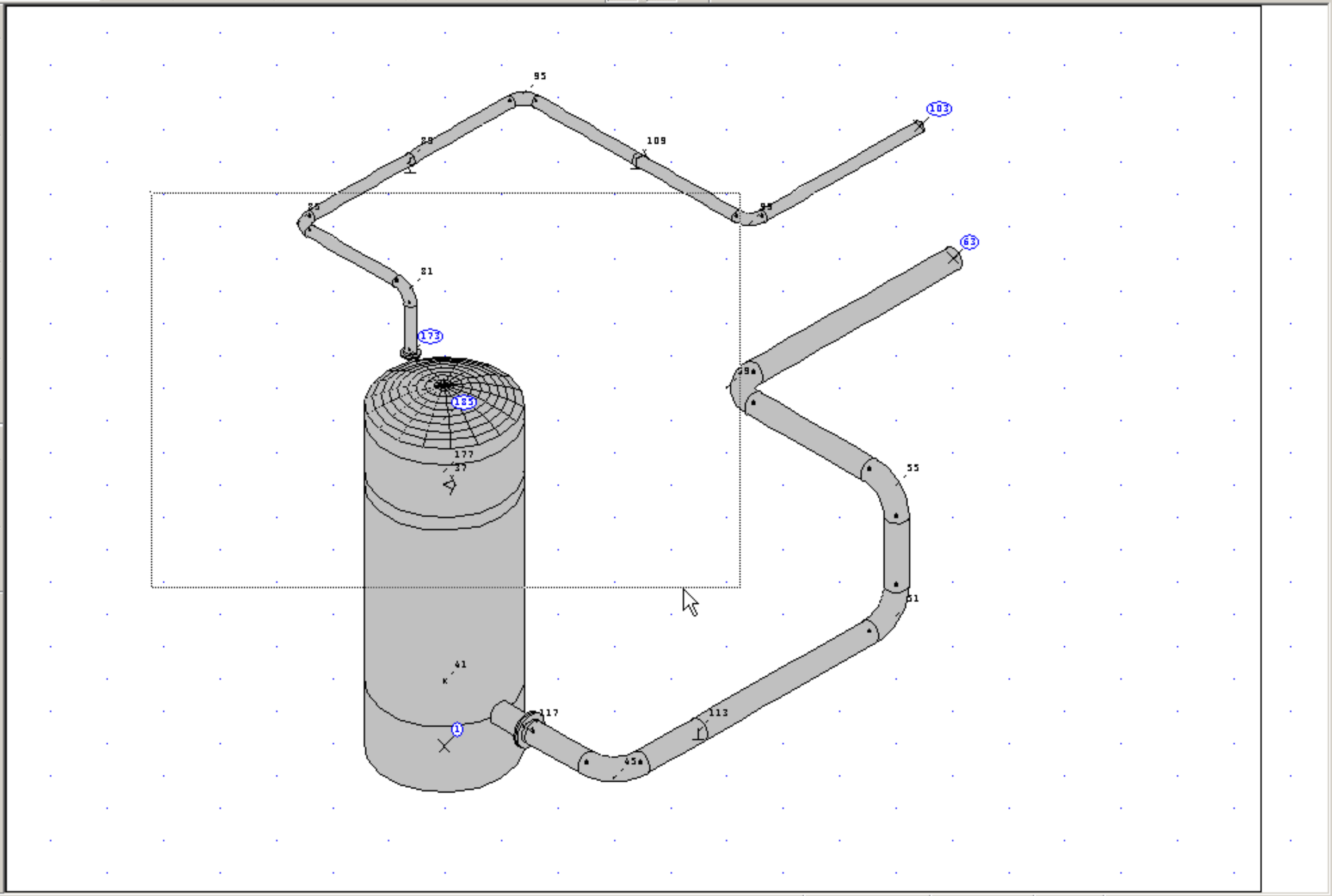

Calculation output

Output of storing, loading ...

Ready !

Za
Ya
Xa

ROHR2 31.0 beta - Dynamic - [I:\Schul+Präsentation\Tutorials\English\FESU\Tank_Torispherical-head_with_nozzle\Step_0\Step_0.r2w*]

File Edit Properties Loads Results Documentation View Isometry Options Extras Window Help SIGMA

F1 for Help | DN2200.0 ST35.8 PA=16.0bar TA=200°C | 0, 0, 0

Input | Result | Isometry | DN2200.0 | Gewicht | Lc | Tp

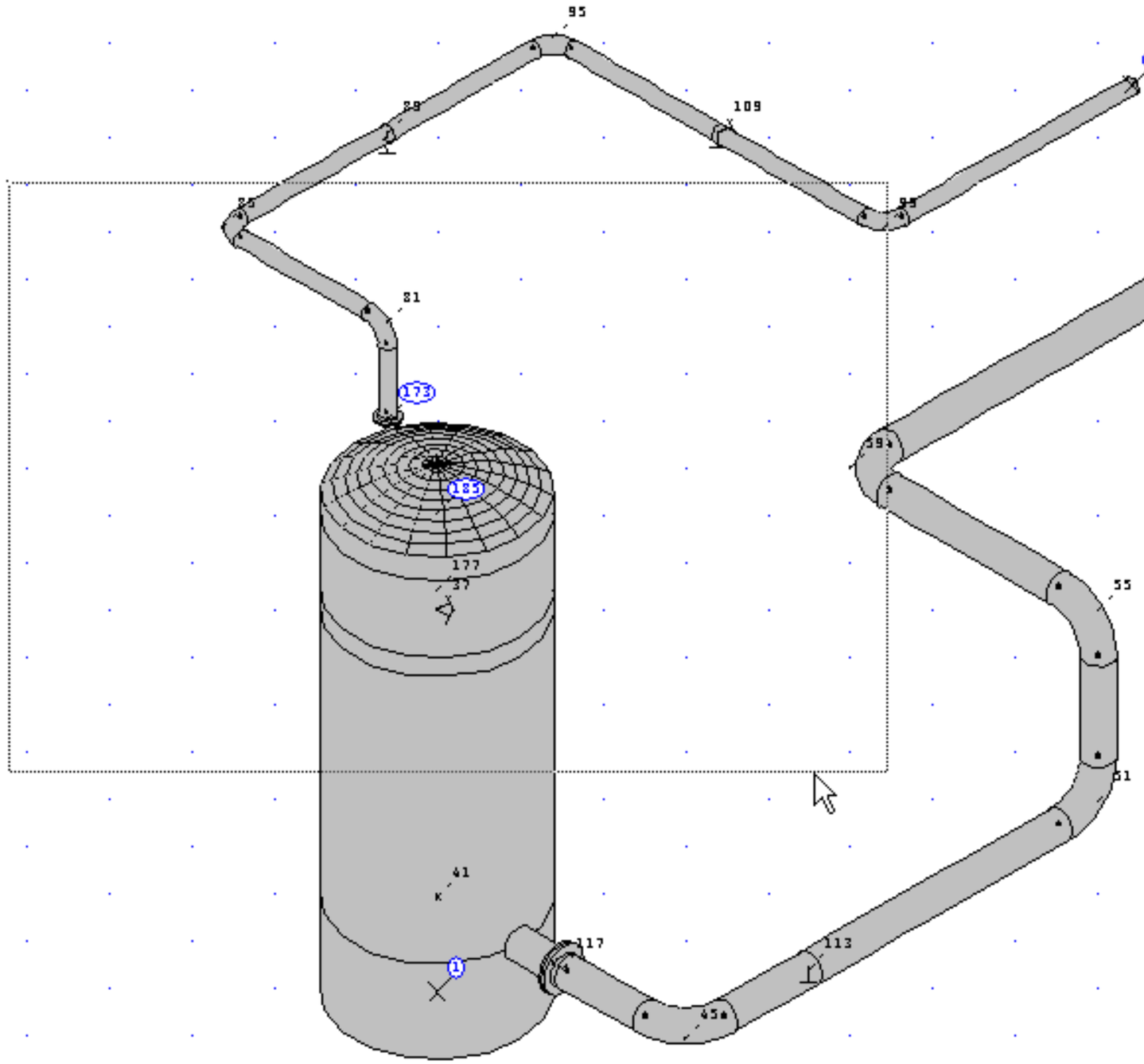

Calculation output | Output of storing, loading ...

Ready !

Za Ya Xa

ROHR2 31.0 beta - Dynamic - [I:\Schul+Präsentation\Tutorials\English\FESU\Tank_Torispherical-head_with_nozzle\Step_0\Step_0.r2w*]

File Edit Properties Loads Results Documentation View Isometry Options Extras Window Help SIGMA

F1 for Help

DN2200.0 ST35.8 PA=16.0bar TA=200°C

0, 0, 0

Input Result Isometry

DN2200.0

Gewicht

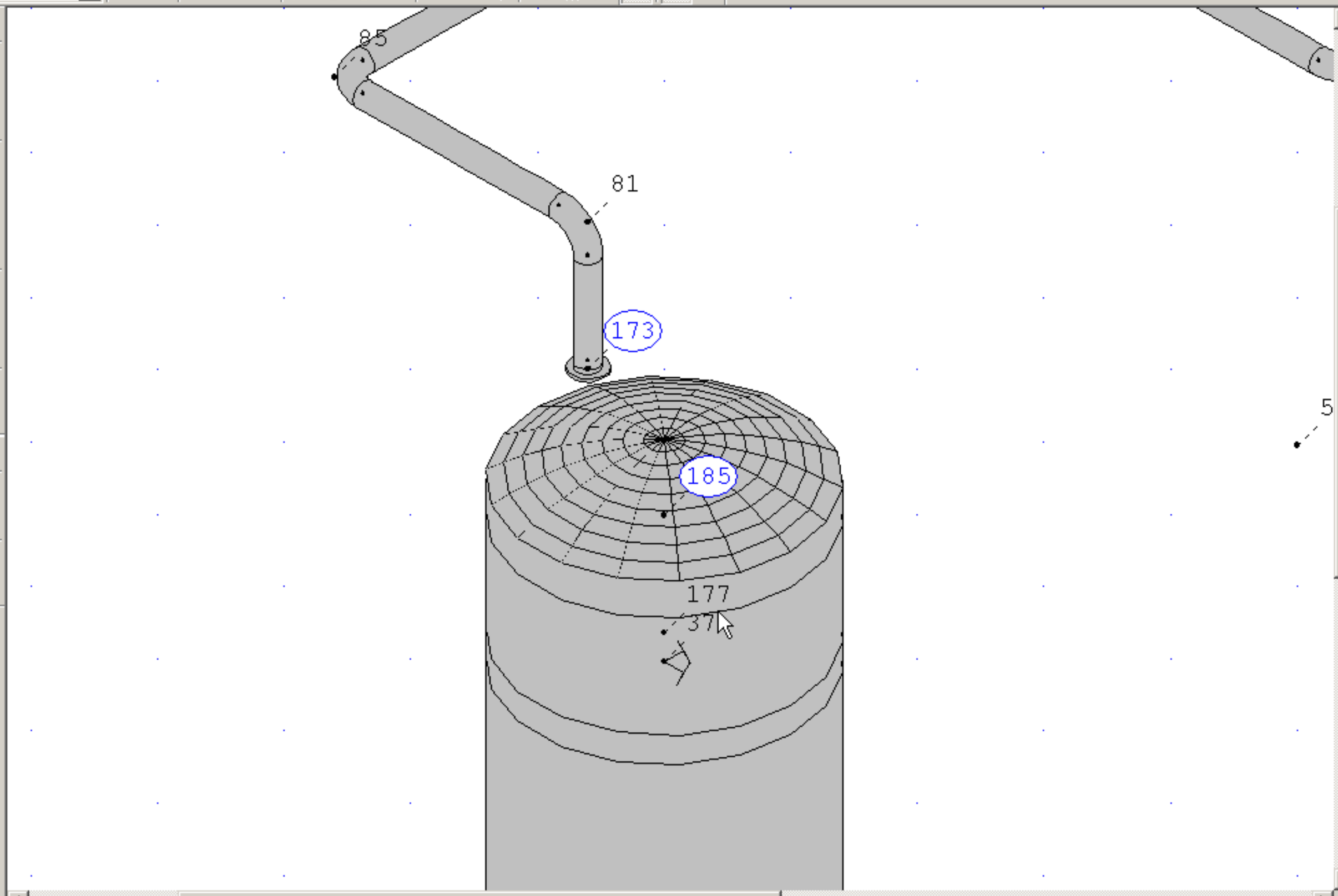

Calculation output | Output of storing, loading ...

Ready!

Za Ya Xa

ROHR2 31.0 beta - Dynamic - [I:\Schul+Präsentation\Tutorials\English\FESU\Tank_Torispherical-head_with_nozzle\Step_0\Step_0.r2w*]

File Edit Properties Loads Results Documentation View Isometry Options Extras Window Help SIGMA

ZX-View

DN2200.0 ST35.8 PA=16.0bar TA=200°C

0, 0, 0

Input Result Isometry

DN2200.0

Gewicht

Lc

Tp

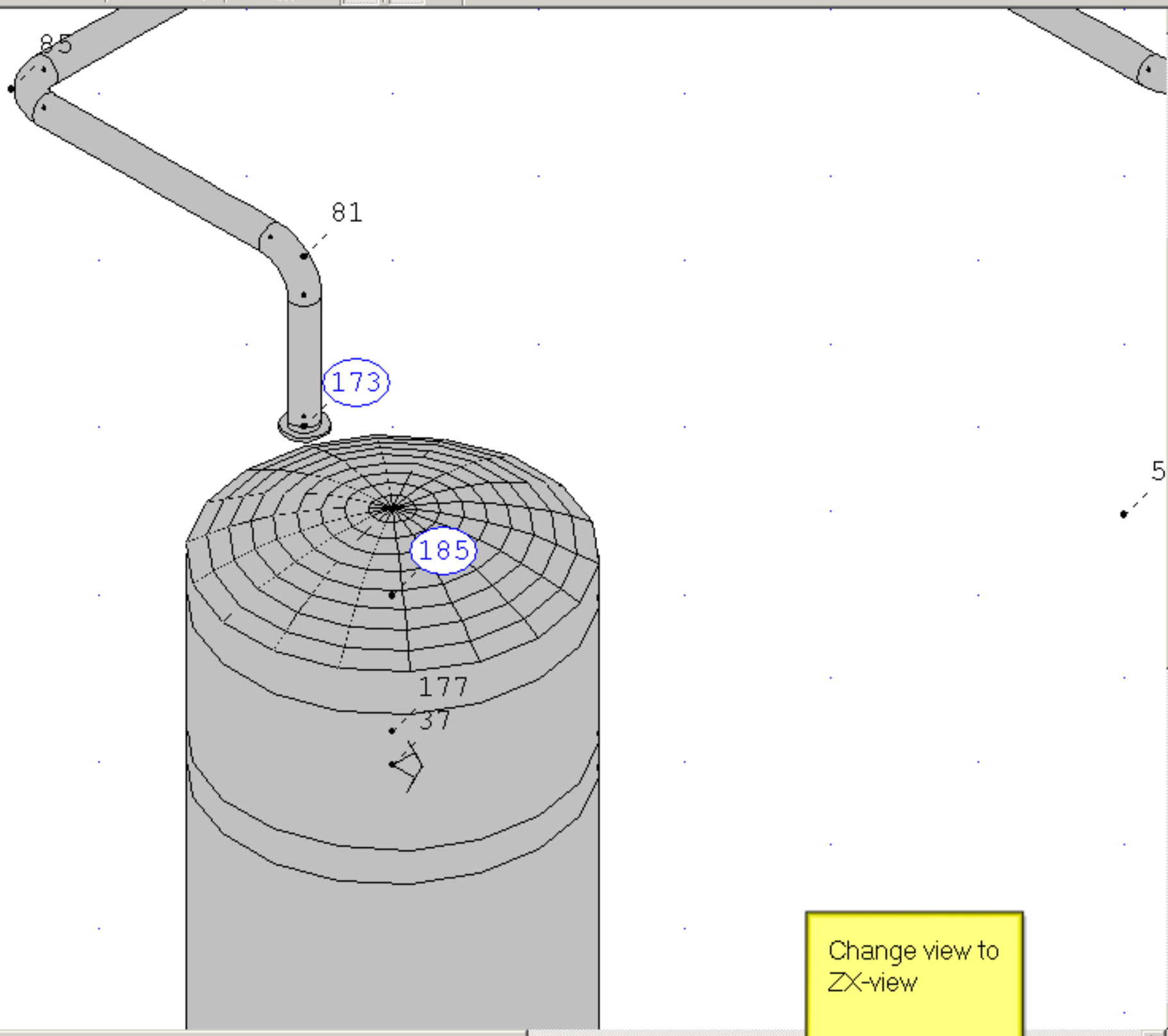

Change view to ZX-view

Calculation output

Output of storing, loading ...

Ready!

ROHR2 31.0 beta - Dynamic - [I:\Schul+Präsentation\Tutorials\English\FESU\Tank_Torispherical-head_with_nozzle\Step_0\Step_0.r2w*]

File Edit Properties Loads Results Documentation View Isometry Options Extras Window Help SIGMA

F1 for Help

DN2200.0 ST35.8 PA=16.0bar TA=200°C

0, 0, 0

Input Result Isometry

DN2200.0

Gewicht

Lc

Tp

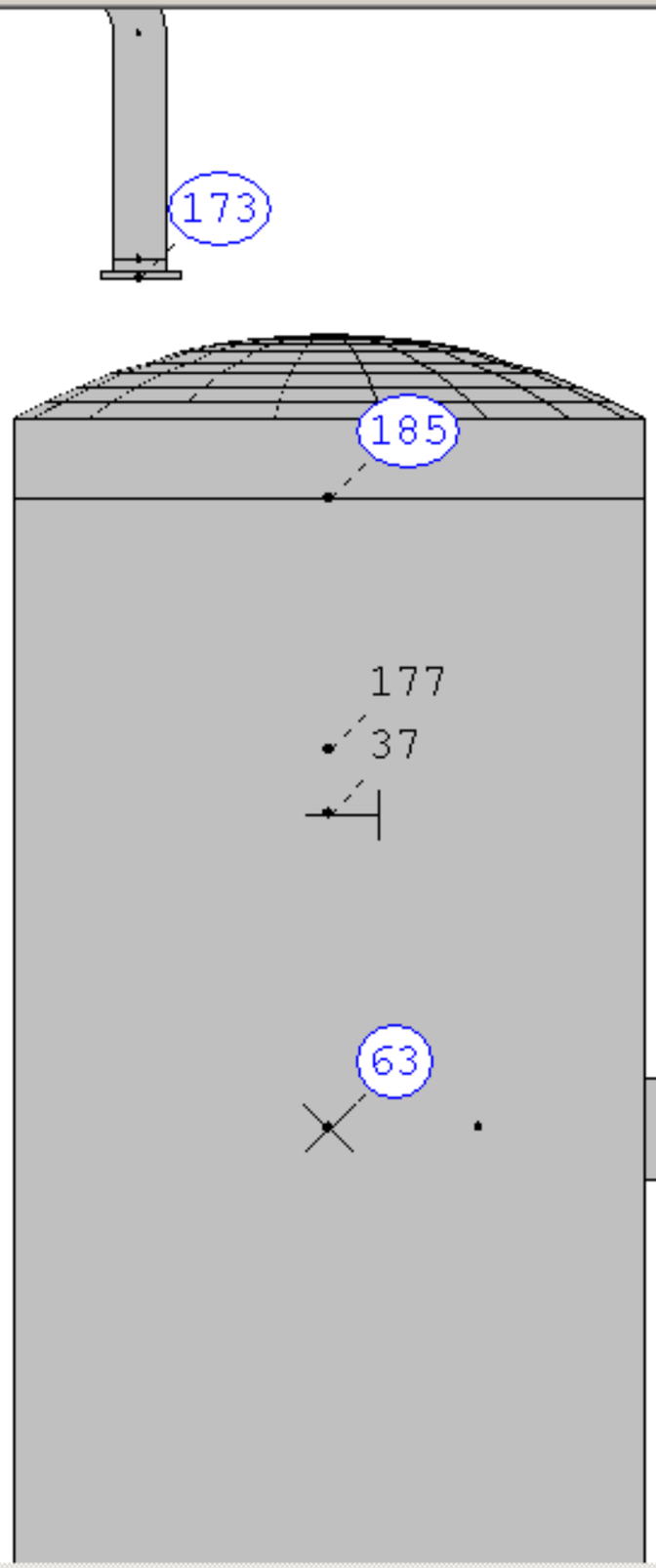

Calculation output

Output of storing, loading ...

Ready!

Za

Ya Xa

ROHR2 31.0 beta - Dynamic - [I:\Schul+Präsentation\Tutorials\English\FESU\Tank_Torispherical-head_with_nozzle\Step_0\Step_0.r2w*]

File Edit Properties Loads Results Documentation View Isometry Options Extras Window Help SIGMA

Show dimensions | DN2200.0 ST35.8 PA=16.0bar TA=200°C | 0, 0, 0

Input Result Isometry | DN2200.0 | Gewicht | Lc | Tp

Change to line view

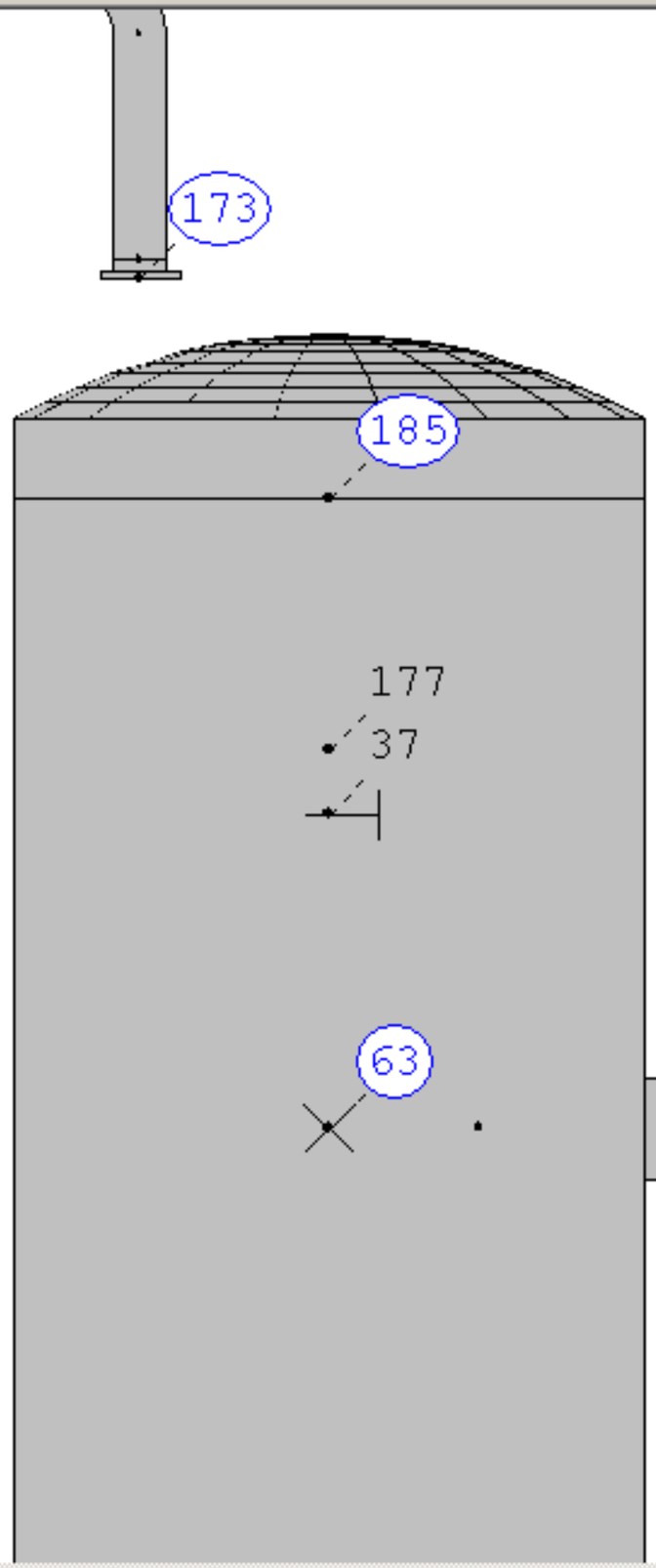

Calculation output | Output of storing, loading ...

Ready!

Za Ya Xa

ROHR2 31.0 beta - Dynamic - [I:\Schul+Präsentation\Tutorials\English\FESU\Tank_Torispherical-head_with_nozzle\Step_0\Step_0.r2w*]

File Edit Properties Loads Results Documentation View Isometry Options Extras Window Help SIGMA

F1 for Help

DN2200.0 ST35.8 PA=16.0bar TA=200°C

0, 0, 0

Input Result Isometry

DN2200.0

Gewicht

Lc

Tp

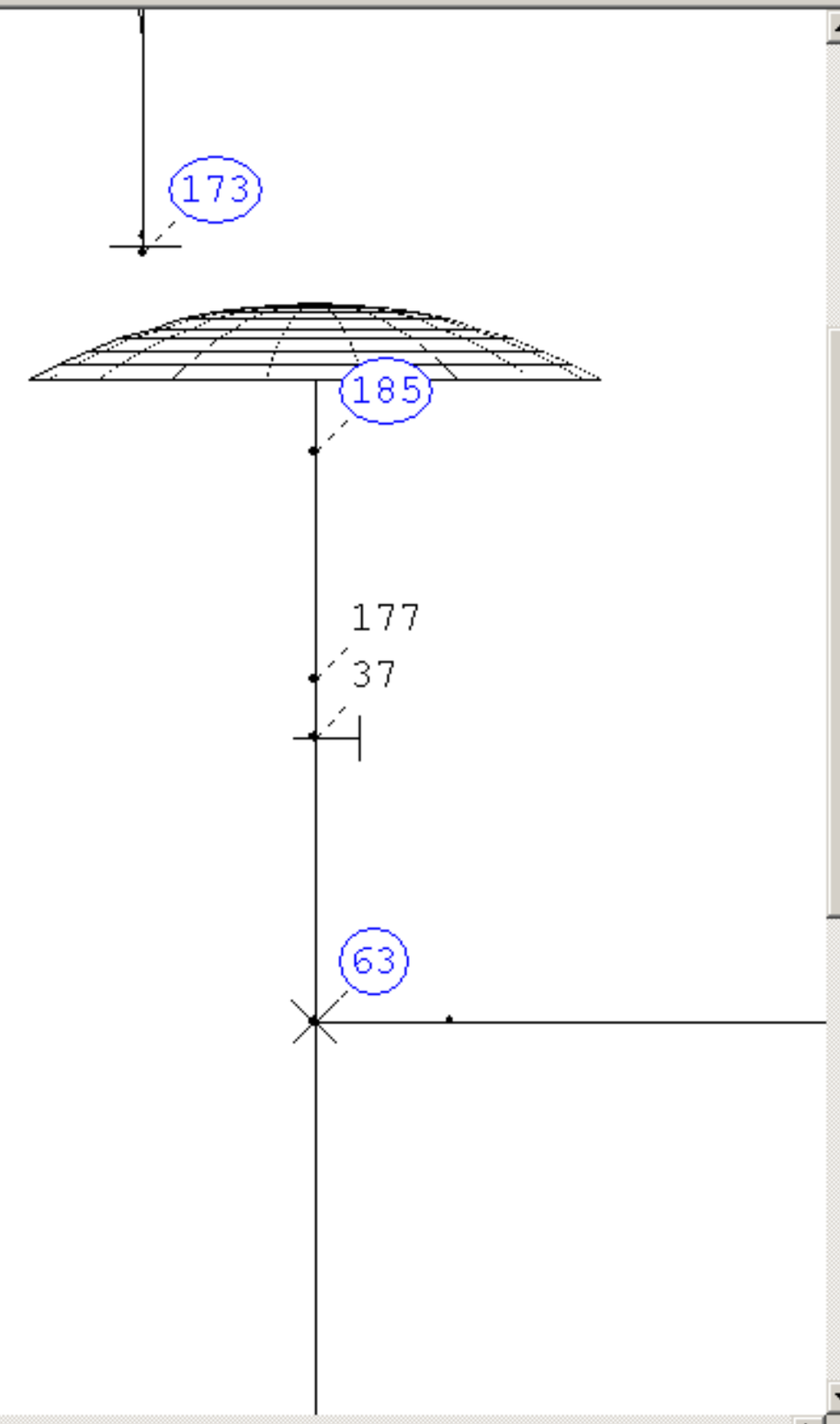

Calculation output

Output of storing, loading ...

Ready!

Za

Ya Xa

ROHR2 31.0 beta - Dynamic - [I:\Schul+Präsentation\Tutorials\English\FESU\Tank_Torispherical-head_with_nozzle\Step_0\Step_0.r2w*]

File Edit Properties Loads Results Documentation View Isometry Options Extras Window Help SIGMA

F1 for Help

DN2200.0 ST35.8 PA=16.0bar TA=200°C

0, 0, 0

Input Result Isometry

DN2200.0

Change the dimension

Gewicht

Lc

Tp

Txt Txt XYZ Txt Txt Bmp Meta file HP GL

173

185

177

37

63

Calculation output | Output of storing, loading ...

Ready!

Za Ya Xa

5°

ROHR2 31.0 beta - Dynamic - [I:\Schul+Präsentation\Tutorials\English\FESU\Tank_Torispherical-head_with_nozzle\Step_0\Step_0.r2w*]

File Edit Properties Loads Results Documentation View Isometry Options Extras Window Help SIGMA

F1 for Help

DN2200.0 ST35.8 PA=16.0bar TA=200°C

0, 0, 0

Input Result Isometry

DN2200.0

DN2200.0
DN150.0
DN300.0
STARR.1

Gewicht

Lc

Tp

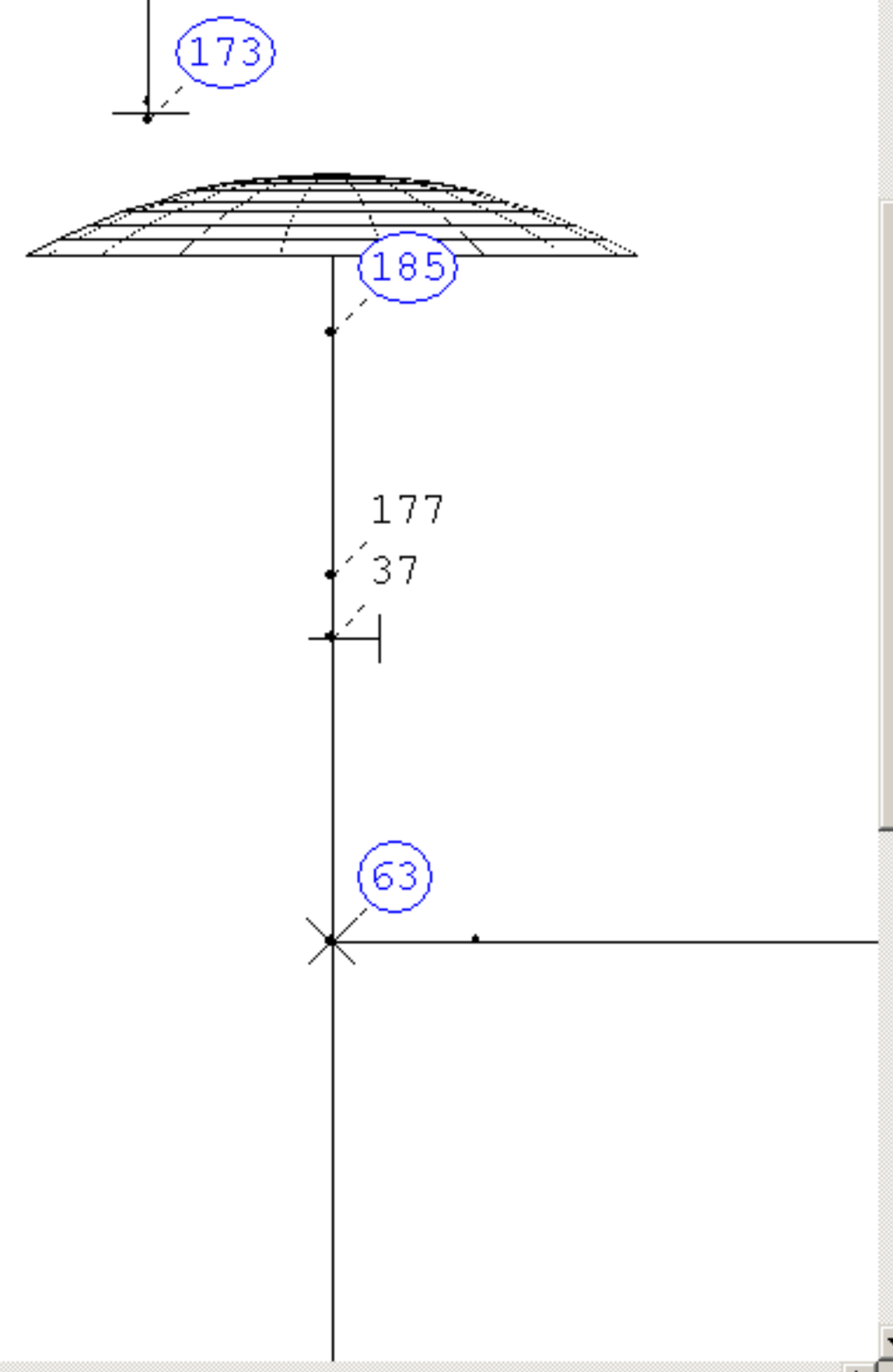

Calculation output

Output of storing, loading ...

Ready!

Za
Ya Xa

ROHR2 31.0 beta - Dynamic - [I:\Schul+Präsentation\Tutorials\English\FESU\Tank_Torispherical-head_with_nozzle\Step_0\Step_0.r2w*]

File Edit Properties Loads Results Documentation View Isometry Options Extras Window Help SIGMA

F1 for Help

DN2200.0 ST35.8 PA=16.0bar TA=200°C

0, 0, 0

Input Result Isometry

DN2200.0

Gewicht Lc Tp

DN2200.0
DN150.0
DN300.0
STARR.1

Choose rigid element

173

185

177

37

63

Txt Txt Txt Txt Bmp Meta file HP GL

Calculation output | Output of storing, loading ...

Ready!

Za Ya Xa

5°

ROHR2 31.0 beta - Dynamic - [I:\Schul+Präsentation\Tutorials\English\FESU\Tank_Torispherical-head_with_nozzle\Step_0\Step_0.r2w*]

File Edit Properties Loads Results Documentation View Isometry Options Extras Window Help SIGMA

F1 for Help

STARR.1 ST35.8

0, 0, 0

Input Result Isometry

STARR.1

Gewicht

Lc

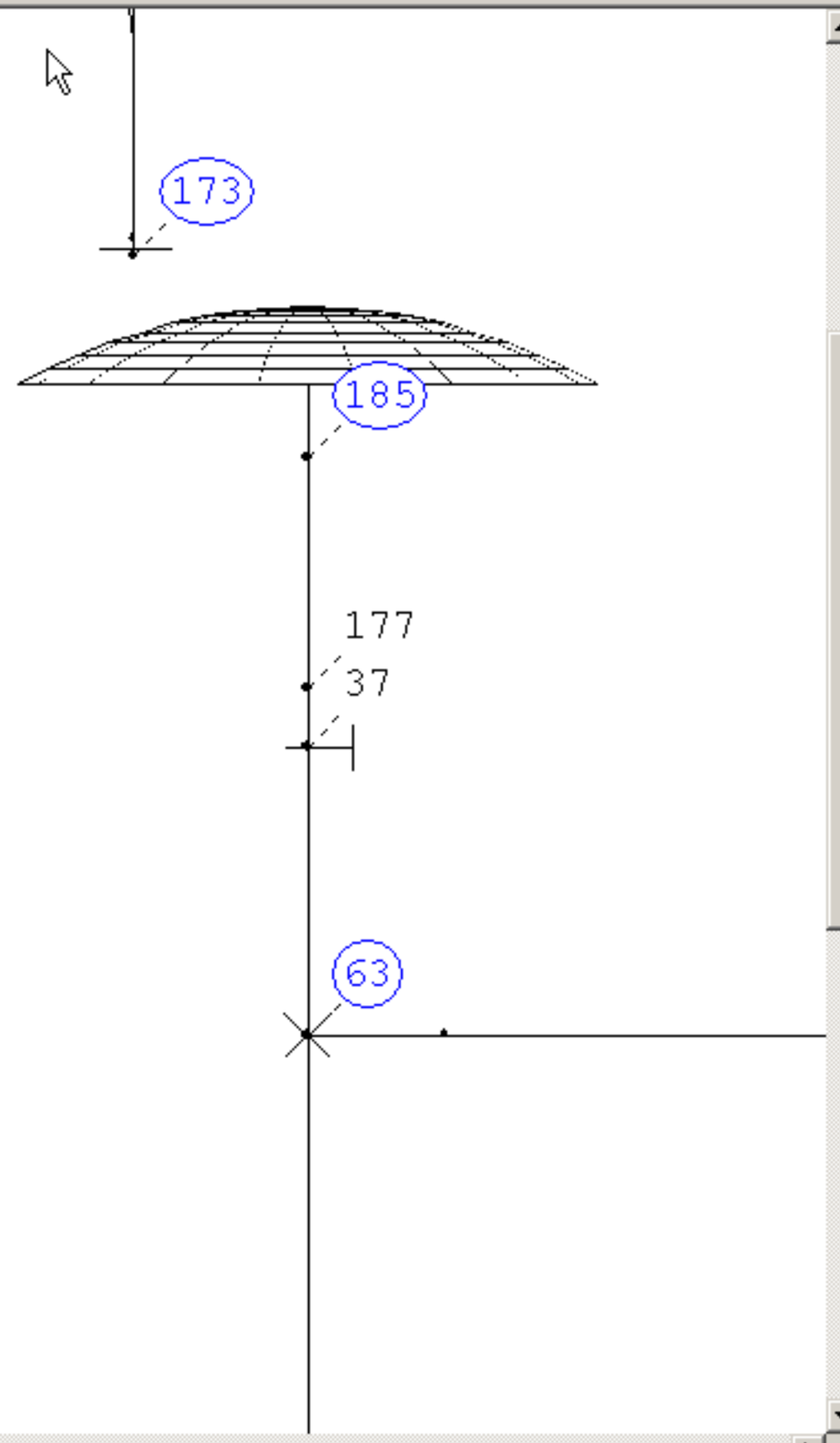

Calculation output | Output of storing, loading ...

Ready!

Za
Ya Xa

ROHR2 31.0 beta - Dynamic - [I:\Schul+Präsentation\Tutorials\English\FESU\Tank_Torispherical-head_with_nozzle\Step_0\Step_0.r2w*]

File Edit Properties Loads Results Documentation View Isometry Options Extras Window Help SIGMA

Draw

STARR.1 ST35.8

0, 0, 0

Input Result Isometry

STARR.1

Gewicht

Lc

Click 'Draw'

173

185

177

37

63

Calculation output | Output of storing, loading ...

Ready!

Za

Ya Xa

ROHR2 31.0 beta - Dynamic - [I:\Schul+Präsentation\Tutorials\English\FESU\Tank_Torispherical-head_with_nozzle\Step_0\Step_0.r2w*]

File Edit Properties Loads Results Documentation View Isometry Options Extras Window Help SIGMA

Draw | STARR.1 ST35.8 | 0, 0, 0

Input | Result | Isometry | STARR.1 | Gewicht | Lc | Tp

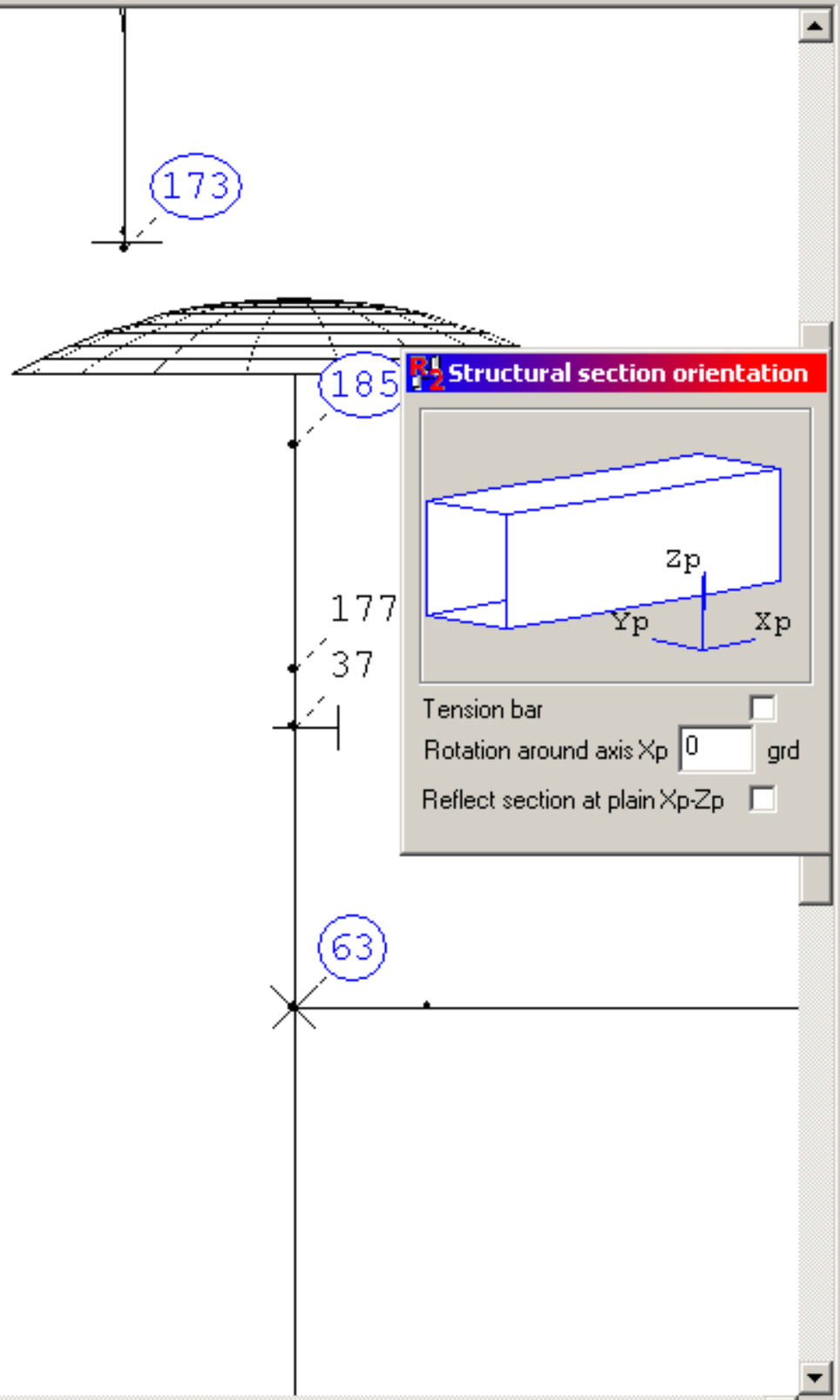

Calculation output | Output of storing, loading ...

Ready!

Za Ya Xa

ROHR2 31.0 beta - Dynamic - [I:\Schul+Präsentation\Tutorials\English\FESU\Tank_Torispherical-head_with_nozzle\Step_0\Step_0.r2w*]

File Edit Properties Loads Results Documentation View Isometry Options Extras Window Help SIGMA

Draw | STARR.1 ST35.8 | 0, 0, 0

Input | Result | Isometry | STARR.1 | Gewicht | Lc

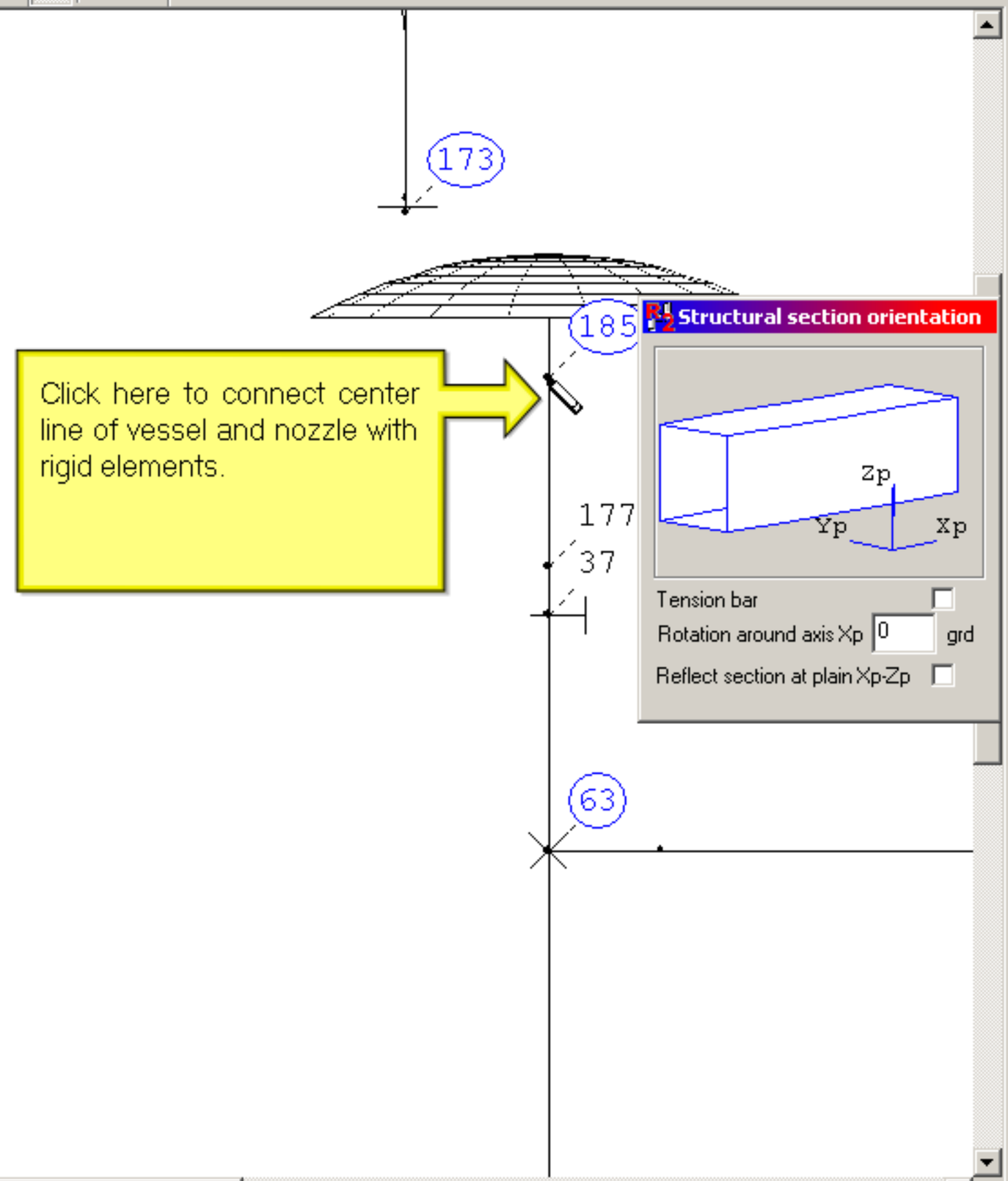

Calculation output | Output of storing, loading ...

Ready!

Za Ya Xa

ROHR2 31.0 beta - Dynamic - [I:\Schul+Präsentation\Tutorials\English\FESU\Tank_Torispherical-head_with_nozzle\Step_0\Step_0.r2w*]

File Edit Properties Loads Results Documentation View Isometry Options Extras Window Help SIGMA

Draw | STARR.1 ST35.8 | 0, 0, 0

Input | Result | Isometry | STARR.1 | Gewicht | Lc | Tp

Difference coordinates

Node name 187 | Reference node 185

DX 0 mm | DY 0 mm | DZ 0 mm | No. of segments 1

Absolute coordinates | Data in local cs. of segment

Apply | Close | Back | Cylinder coord. | Spherical coord.

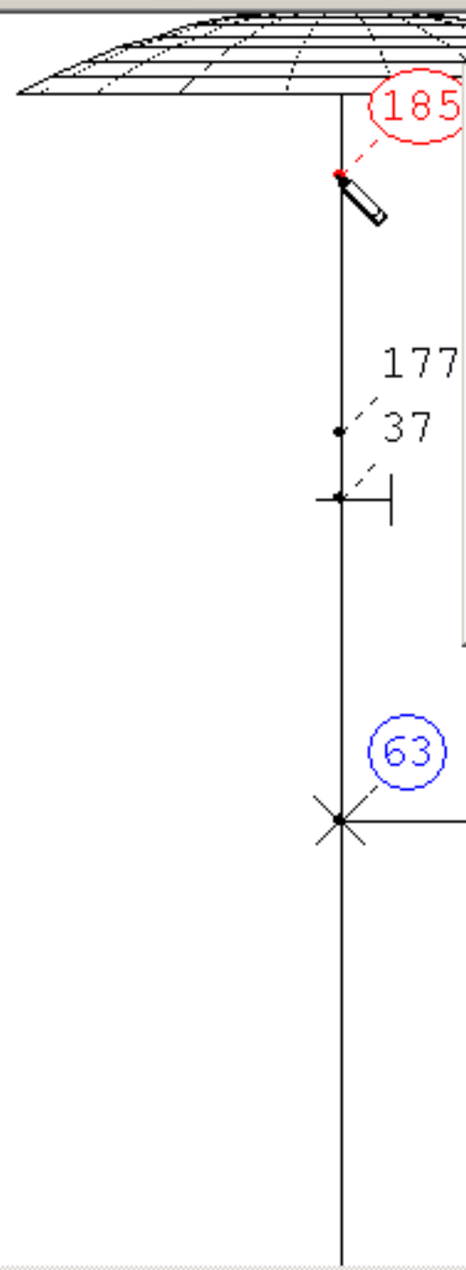

Structural section orientation

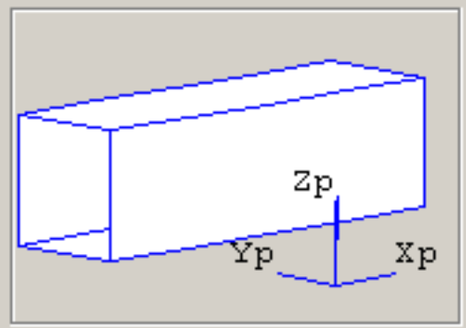

Tension bar

Rotation around axis Xp 0 grd

Reflect section at plain Xp-Zp

Calculation output | Output of storing, loading ...

Ready!

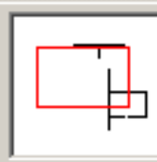

ROHR2 31.0 beta - Dynamic - [I:\Schul+Präsentation\Tutorials\English\FESU\Tank_Torispherical-head_with_nozzle\Step_0\Step_0.r2w*]

File Edit Properties Loads Results Documentation View Isometry Options Extras Window Help SIGMA

Draw | STARR.1 ST35.8 | -1000, 0, 0

Input | Result | Isometry | STARR.1 | Gewicht | Lc | Tp

The distance between the center line and the nozzle

Difference coordinates

Node name 187 Reference node 185

DX -600 mm DY 0 mm DZ 0 mm No. of segments 1

Absolute coordinates | Data in local cs. of segment

Apply | Close | Back | Cylinder coord. | Spherical coord.

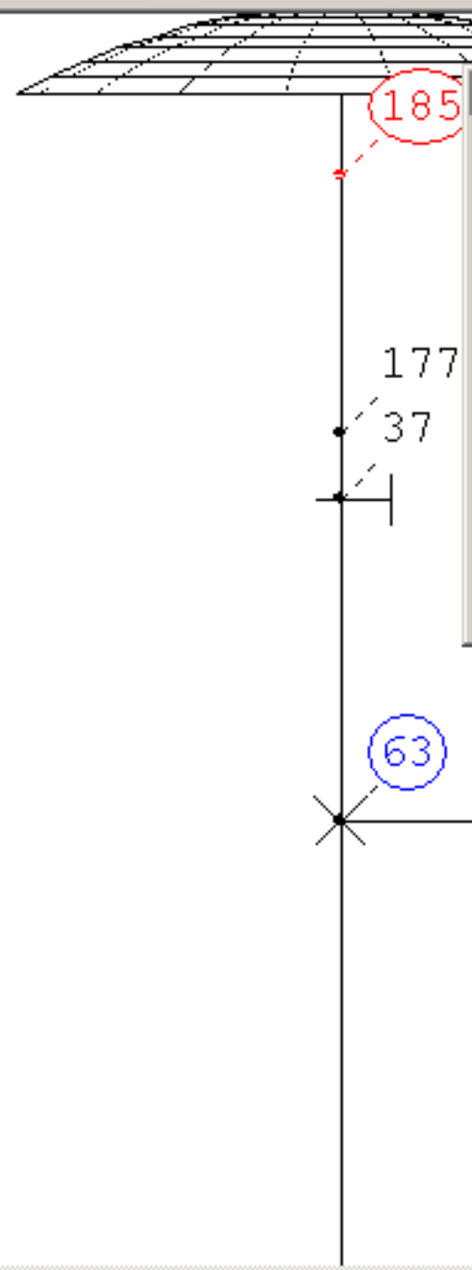

Structural section orientation

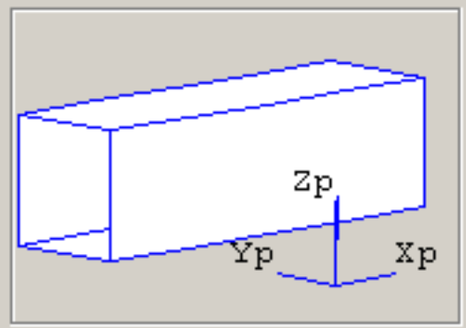

Tension bar

Rotation around axis Xp 0 grd

Reflect section at plain Xp-Zp

Calculation output | Output of storing, loading ...

Ready!

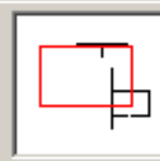

ROHR2 31.0 beta - Dynamic - [I:\Schul+Präsentation\Tutorials\English\FESU\Tank_Torispherical-head_with_nozzle\Step_0\Step_0.r2w*]

File Edit Properties Loads Results Documentation View Isometry Options Extras Window Help SIGMA

Draw | STARR.1 ST35.8 | -1000, 0, 0

Input | Result | Isometry | STARR.1 | Gewicht | Lc | Tp

Difference coordinates

Node name 187 | Reference node 185

DX -600 mm | DY 0 mm | DZ 0 mm | No. of segments 1

Absolute coordinates | Data in local cs. of segment

Apply | Close | Back | Cylinder coord. | Spherical coord.

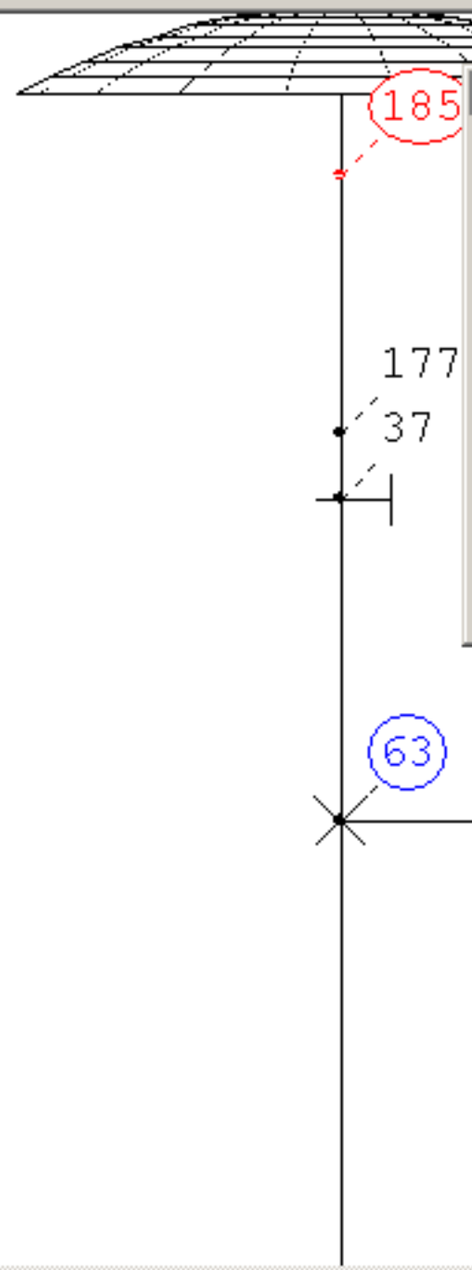

Structural section orientation

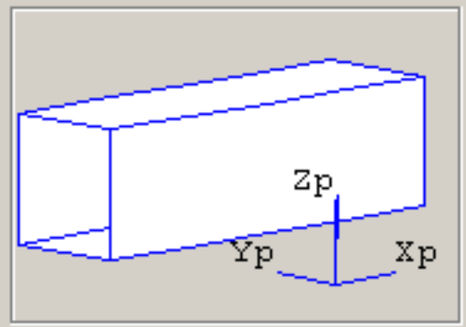

Tension bar

Rotation around axis Xp 0 grd

Reflect section at plain Xp-Zp

Calculation output | Output of storing, loading ...

Ready!

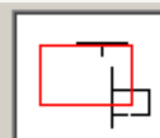

ROHR2 31.0 beta - Dynamic - [I:\Schul+Präsentation\Tutorials\English\FESU\Tank_Torispherical-head_with_nozzle\Step_0\Step_0.r2w*]

File Edit Properties Loads Results Documentation View Isometry Options Extras Window Help SIGMA

Draw | STARR.1 ST35.8 | -1000, 0, 0

Input | Result | Isometry | STARR.1 | Gewicht | Lc | Tp

Difference coordinates

Node name 191 | Reference node 187

DX 0 mm | DY 0 mm | DZ 0 mm | No. of segments 1

Absolute coordinates | Data in local cs. of segment

Apply | Close | Back | Cylinder coord. | Spherical coord.

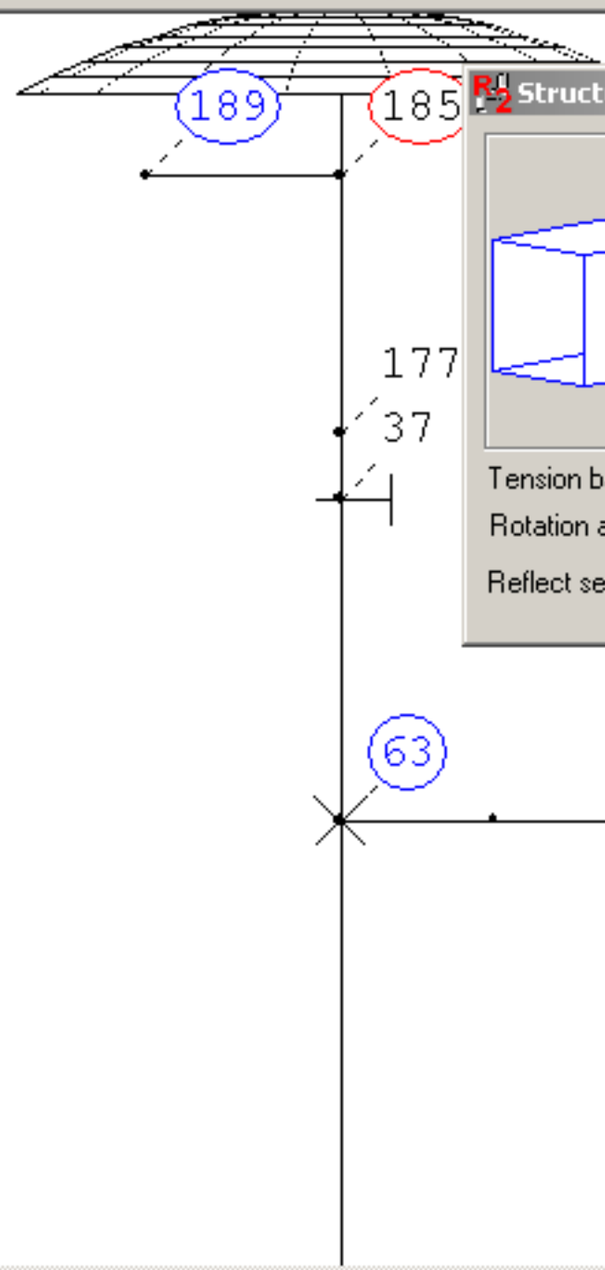

Structural section orientation

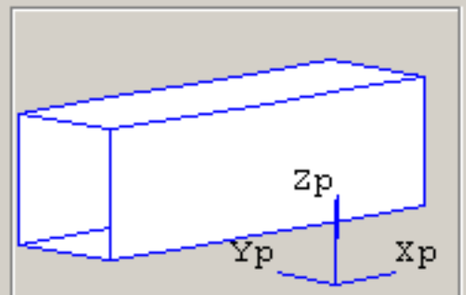

Tension bar

Rotation around axis Xp 0 grd

Reflect section at plain Xp-Zp

Calculation output | Output of storing, loading ...

Ready!

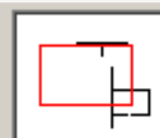

ROHR2 31.0 beta - Dynamic - [I:\Schul+Präsentation\Tutorials\English\FESU\Tank_Torispherical-head_with_nozzle\Step_0\Step_0.r2w*]

File Edit Properties Loads Results Documentation View Isometry Options Extras Window Help SIGMA

Draw

STARR.1 ST35.8

-1000, 0, 0

Input Result Isometry

STARR.1

Gewicht Lc

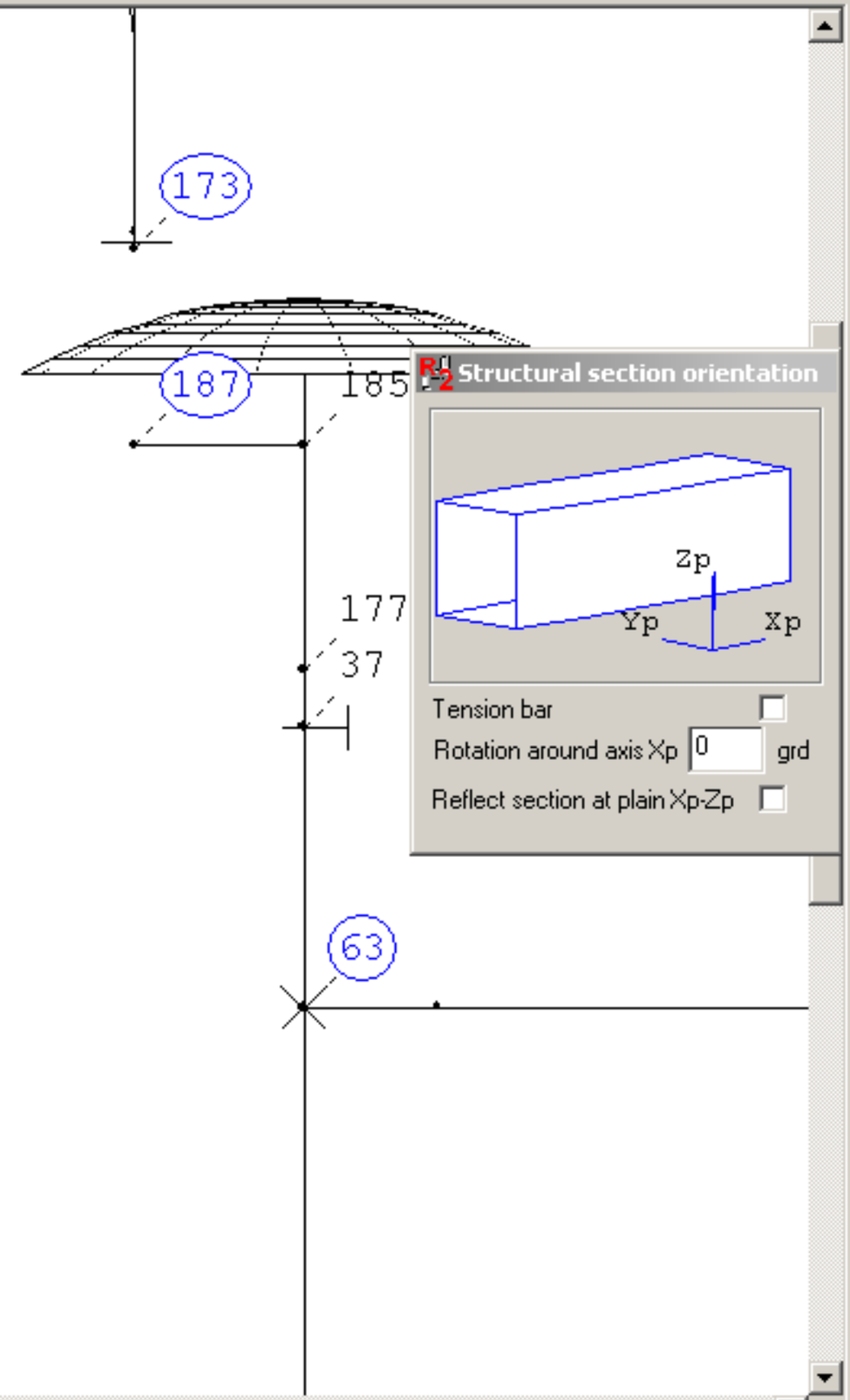

Structural section orientation

Tension bar

Rotation around axis Xp 0 grd

Reflect section at plain Xp-Zp

Calculation output | Output of storing, loading ...

Ready!

Za
Ya Xa

ROHR2 31.0 beta - Dynamic - [I:\Schul+Präsentation\Tutorials\English\FESU\Tank_Torispherical-head_with_nozzle\Step_0\Step_0.r2w*]

File Edit Properties Loads Results Documentation View Isometry Options Extras Window Help SIGMA

Draw | STARR.1 ST35.8 | -1000, 0, 0

Input | Result | Isometry | STARR.1 | Gewicht | Lc | Tp

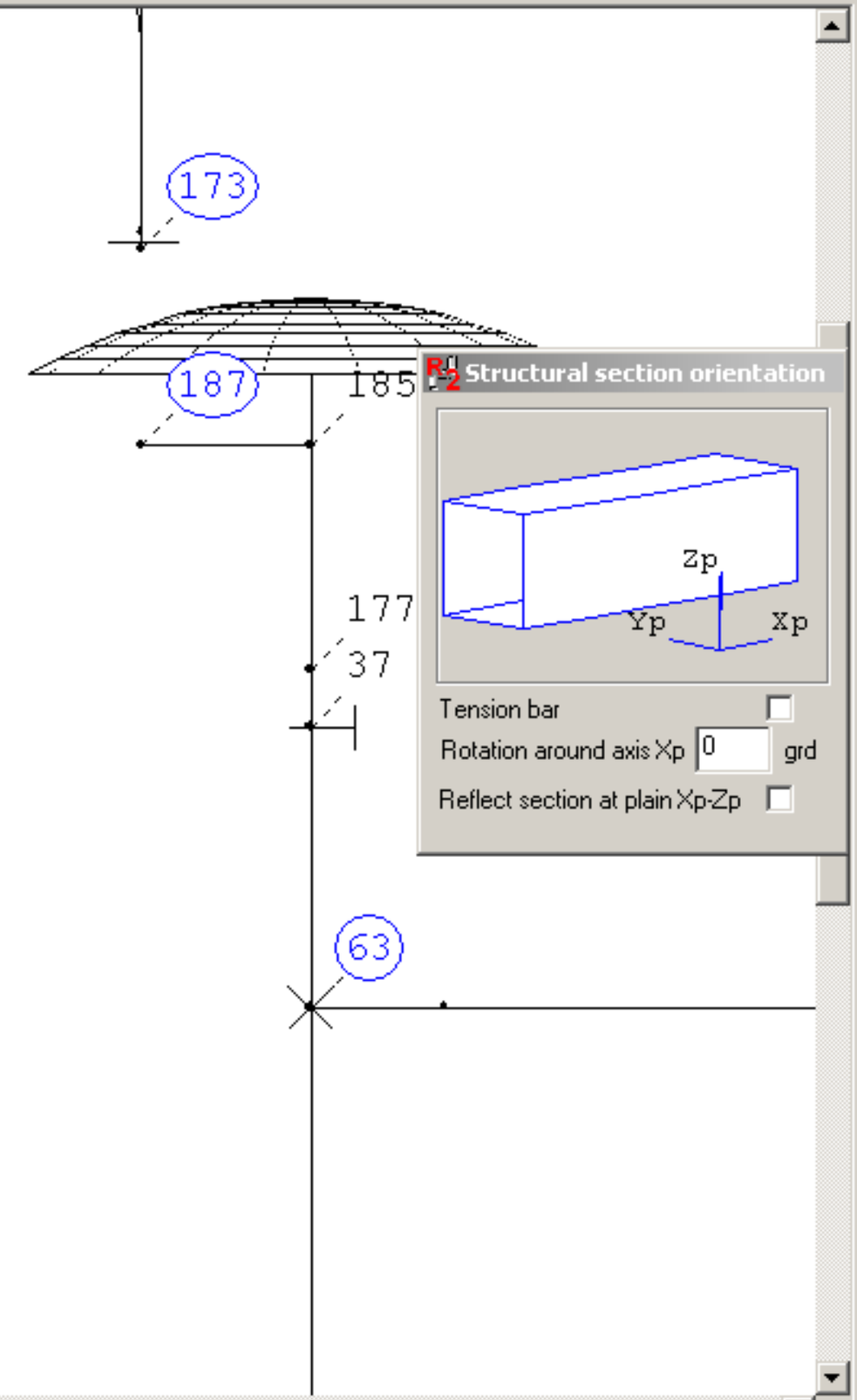

Structural section orientation

Tension bar

Rotation around axis Xp 0 grd

Reflect section at plain Xp-Zp

Calculation output | Output of storing, loading ...

Ready!

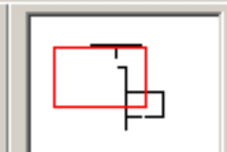

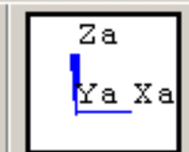

ROHR2 31.0 beta - Dynamic - [I:\Schul+Präsentation\Tutorials\English\FESU\Tank_Torispherical-head_with_nozzle\Step_0\Step_0.r2w*]

File Edit Properties Loads Results Documentation View Isometry Options Extras Window Help SIGMA

Draw

STARR.1 ST35.8

0, 0, 0

Input Result Isometry

STARR.1

Gewicht

Lc

Tp

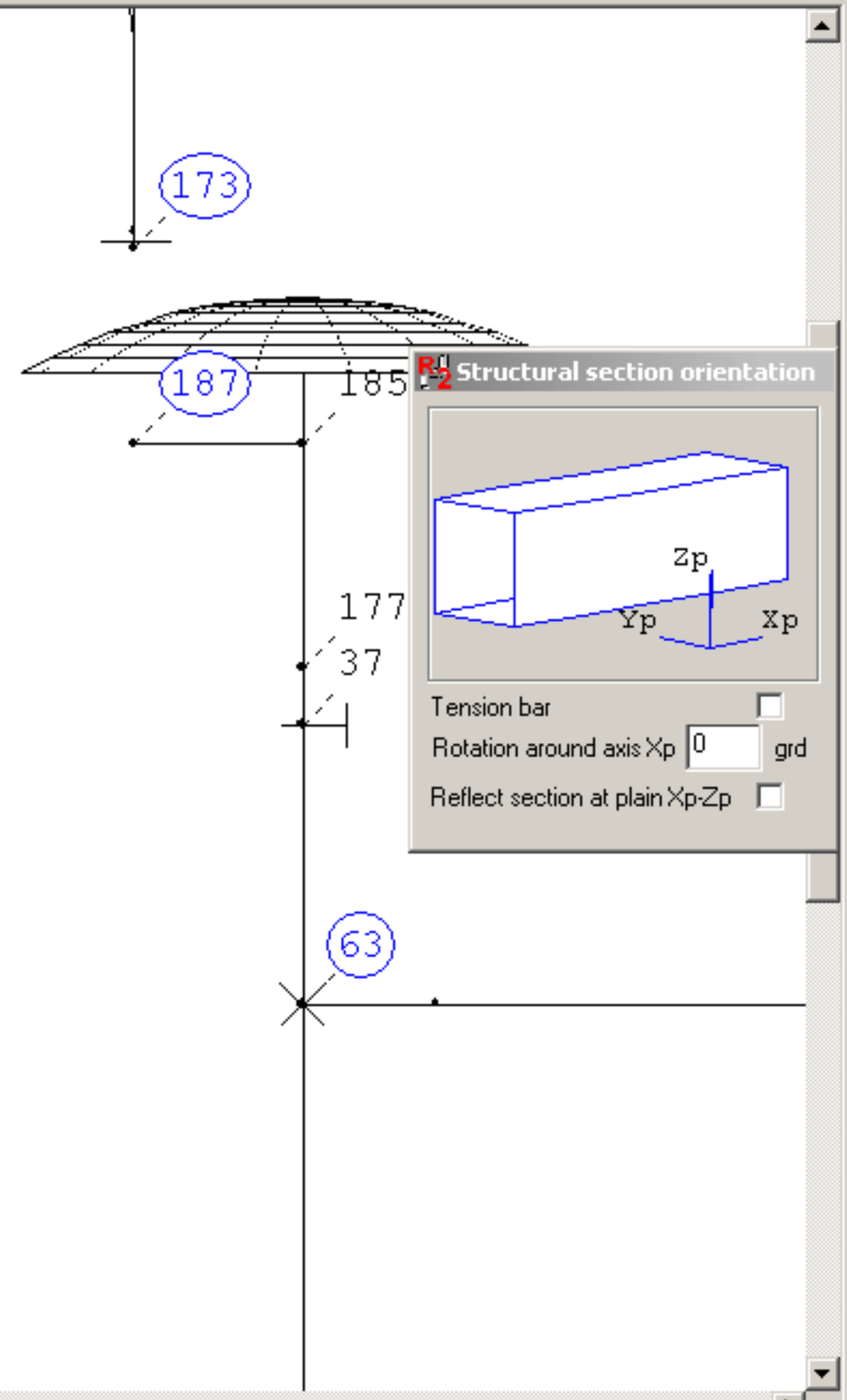

Structural section orientation

Tension bar

Rotation around axis Xp 0 grd

Reflect section at plain Xp-Zp

End function
Draw
View ZX plane
Refresh view
Zoom window
Zoom limits
General view
Select
Segments
Segments parameters
General settings
Project settings

Calculation output | Output of storing, loading ...

Ready!

Za
Ya Xa

ROHR2 31.0 beta - Dynamic - [I:\Schul+Präsentation\Tutorials\English\FESU\Tank_Torispherical-head_with_nozzle\Step_0\Step_0.r2w*]

File Edit Properties Loads Results Documentation View Isometry Options Extras Window Help SIGMA

End function and refresh view

STARR.1 ST35.8

0, 0, 0

Input Result Isometry

STARR.1

Gewicht

Lc

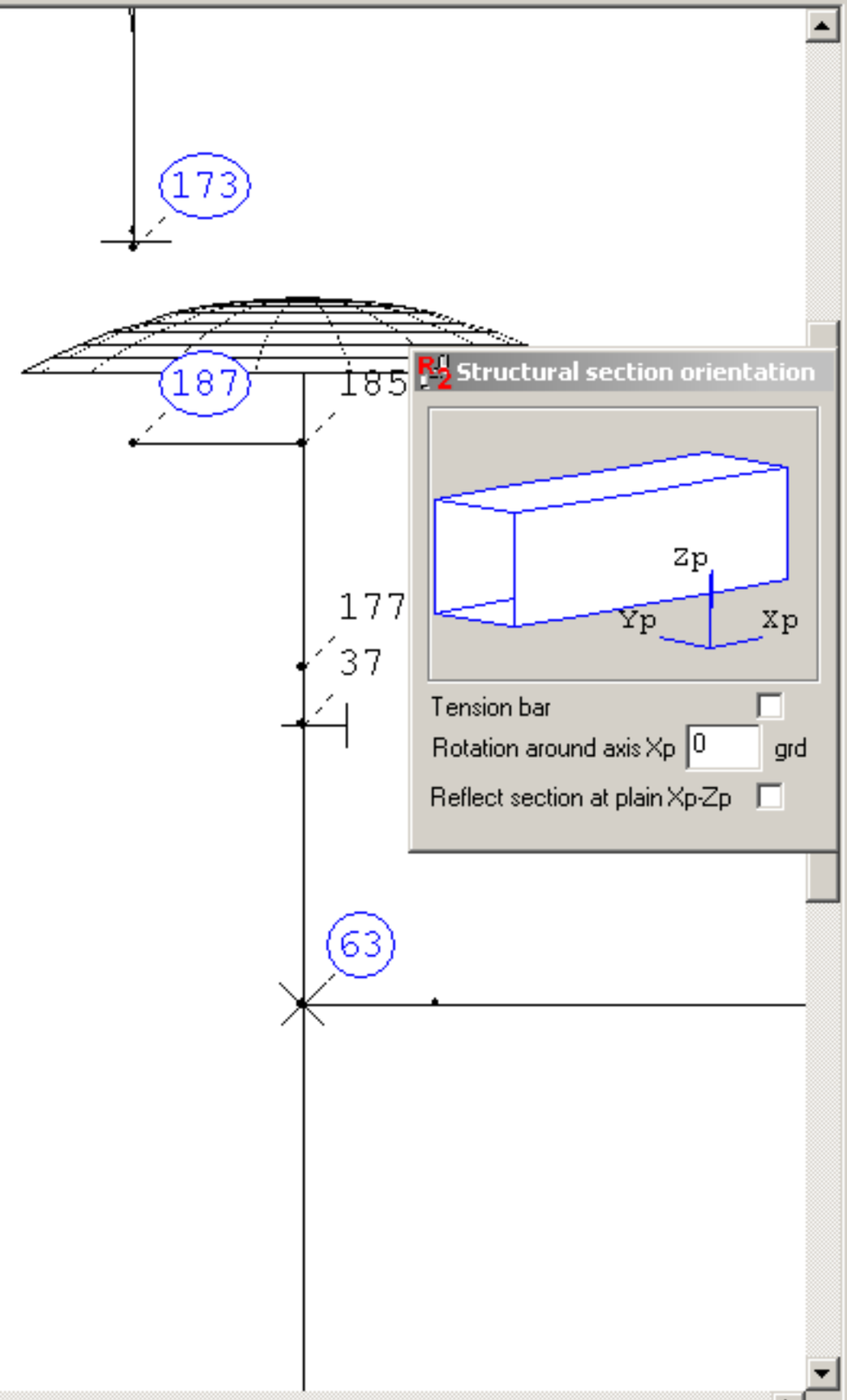

Structural section orientation

Tension bar

Rotation around axis Xp 0 grd

Reflect section at plain Xp-Zp

End function

Draw

View ZX plane

Refresh view

Zoom window

Zoom limits

General view

Select

Segments

Segments parameters

General settings

Project settings

Calculation output

Output of storing, loading ...

Ready!

Za

Ya Xa

ROHR2 31.0 beta - Dynamic - [I:\Schul+Präsentation\Tutorials\English\FESU\Tank_Torispherical-head_with_nozzle\Step_0\Step_0.r2w*]

File Edit Properties Loads Results Documentation View Isometry Options Extras Window Help SIGMA

F1 for Help

STARR.1 ST35.8

0, 0, 0

Input Result Isometry

STARR.1

Gewicht

Lc

Tp

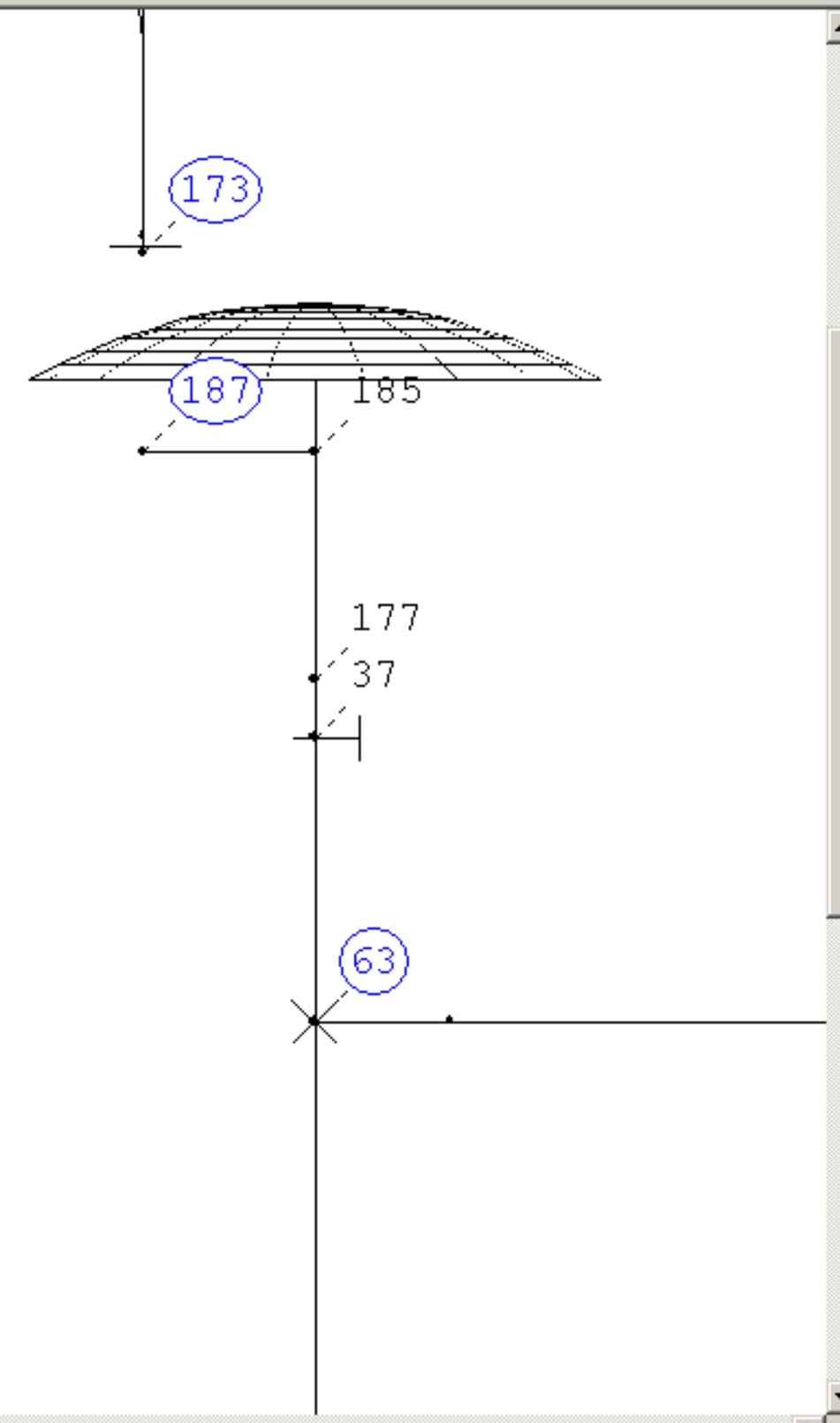

Calculation output

Output of storing, loading ...

Ready!

Za

Ya Xa

ROHR2 31.0 beta - Dynamic - [I:\Schul+Präsentation\Tutorials\English\FESU\Tank_Torispherical-head_with_nozzle\Step_0\Step_0.r2w*]

File Edit Properties Loads Results Documentation View Isometry Options Extras Window Help SIGMA

Dimensions | STARR.1 ST35.8 | 0, 0, 0

Input | Result | Isometry | STARR.1 | Gewicht | Lc | Tp

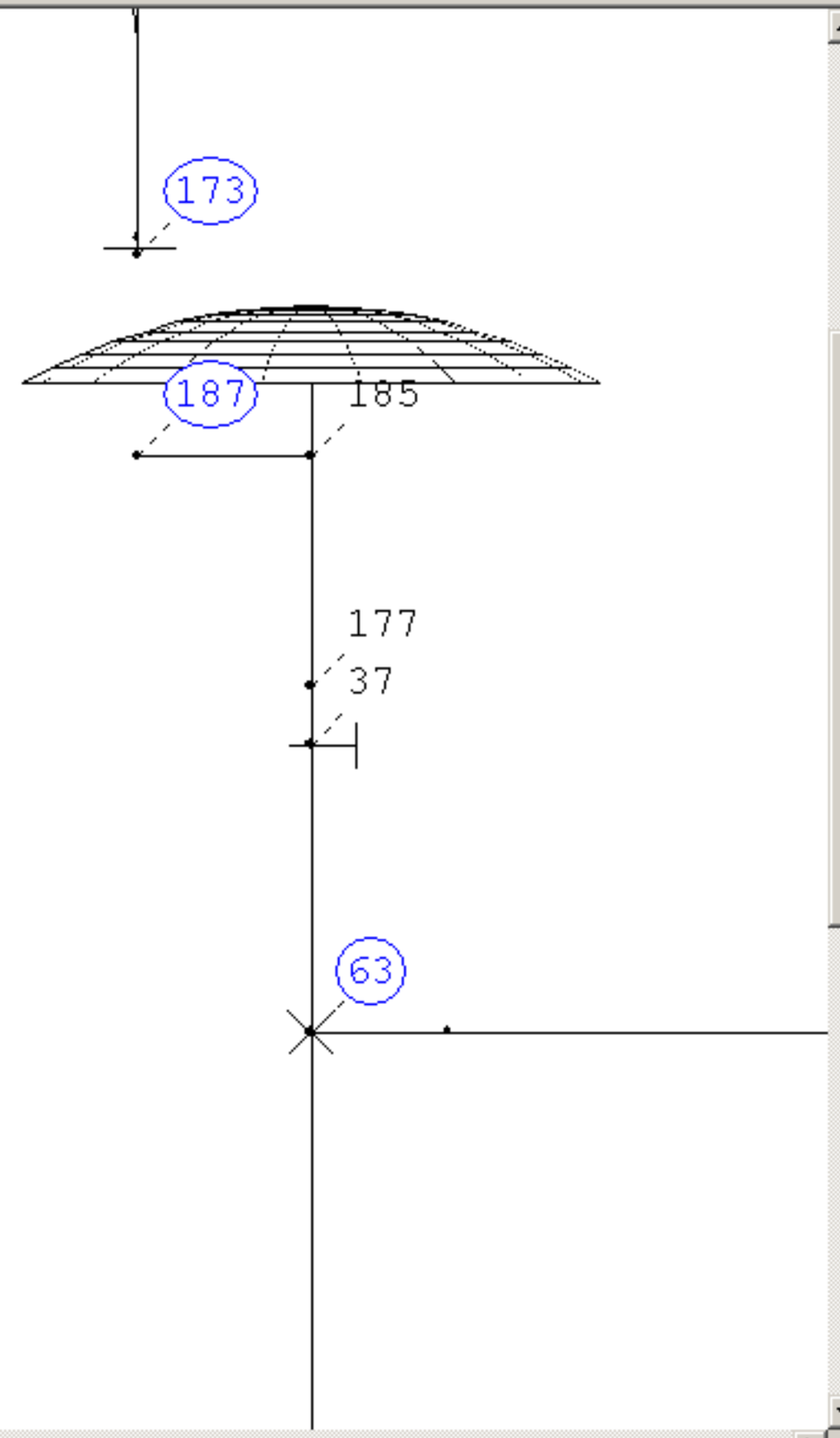

Calculation output | Output of storing, loading ...

Ready!

Za
Ya Xa

ROHR2 31.0 beta - Dynamic - [I:\Schul+Präsentation\Tutorials\English\FESU\Tank_Torispherical-head_with_nozzle\Step_0\Step_0.r2w*]

File Edit Properties Loads Results Documentation View Isometry Options Extras Window Help SIGMA

Dimensions

STARR.1 ST35.8

0, 0, 0

Input Result Isometry

STARR.1

DN2200.0
DN150.0
DN300.0
STARR.1

Gewicht Lc Tp

Txt Txt XYZ Txt Txt Bmp Meta file HP GL

173
187
185
177
37
63

Calculation output | Output of storing, loading ...

Ready!

Za
Ya Xa

ROHR2 31.0 beta - Dynamic - [I:\Schul+Präsentation\Tutorials\English\FESU\Tank_Torispherical-head_with_nozzle\Step_0\Step_0.r2w*]

File Edit Properties Loads Results Documentation View Isometry Options Extras Window Help SIGMA

F1 for Help

STARR.1 ST35.8

0, 0, 0

Input Result Isometry

STARR.1

Gewicht Lc Tp

Choose the dimensions from the nozzle

DN2200.0
DN150.0
DN300.0
STARR.1

173
187
185
177
37
63

Calculation output | Output of storing, loading ...

Ready!

Za
Ya Xa

ROHR2 31.0 beta - Dynamic - [I:\Schul+Präsentation\Tutorials\English\FESU\Tank_Torispherical-head_with_nozzle\Step_0\Step_0.r2w*]

File Edit Properties Loads Results Documentation View Isometry Options Extras Window Help SIGMA

F1 for Help

DN150.0 ST35.8 PA=16.0bar TA=200°C

0, 0, 0

Input Result Isometry

DN150.0

Gewicht

Lc

Tp

Txt Txt Txt Txt Bmp Meta file HP GL

173

187

185

177

37

63

Calculation output | Output of storing, loading ...

Ready!

Za

Ya Xa

5°

ROHR2 31.0 beta - Dynamic - [I:\Schul+Präsentation\Tutorials\English\FESU\Tank_Torispherical-head_with_nozzle\Step_0\Step_0.r2w*]

File Edit Properties Loads Results Documentation View Isometry Options Extras Window Help SIGMA

Draw

DN150.0 ST35.8 PA=16.0bar TA=200°C

0, 0, 0

Input Result Isometry

DN150.0

Gewicht Lc

Click on draw

Draw

173

187

185

177

37

63

Txt Txt Txt Txt Bmp Meta file HP GL

Calculation output Output of storing, loading ...

Ready!

Za Ya Xa

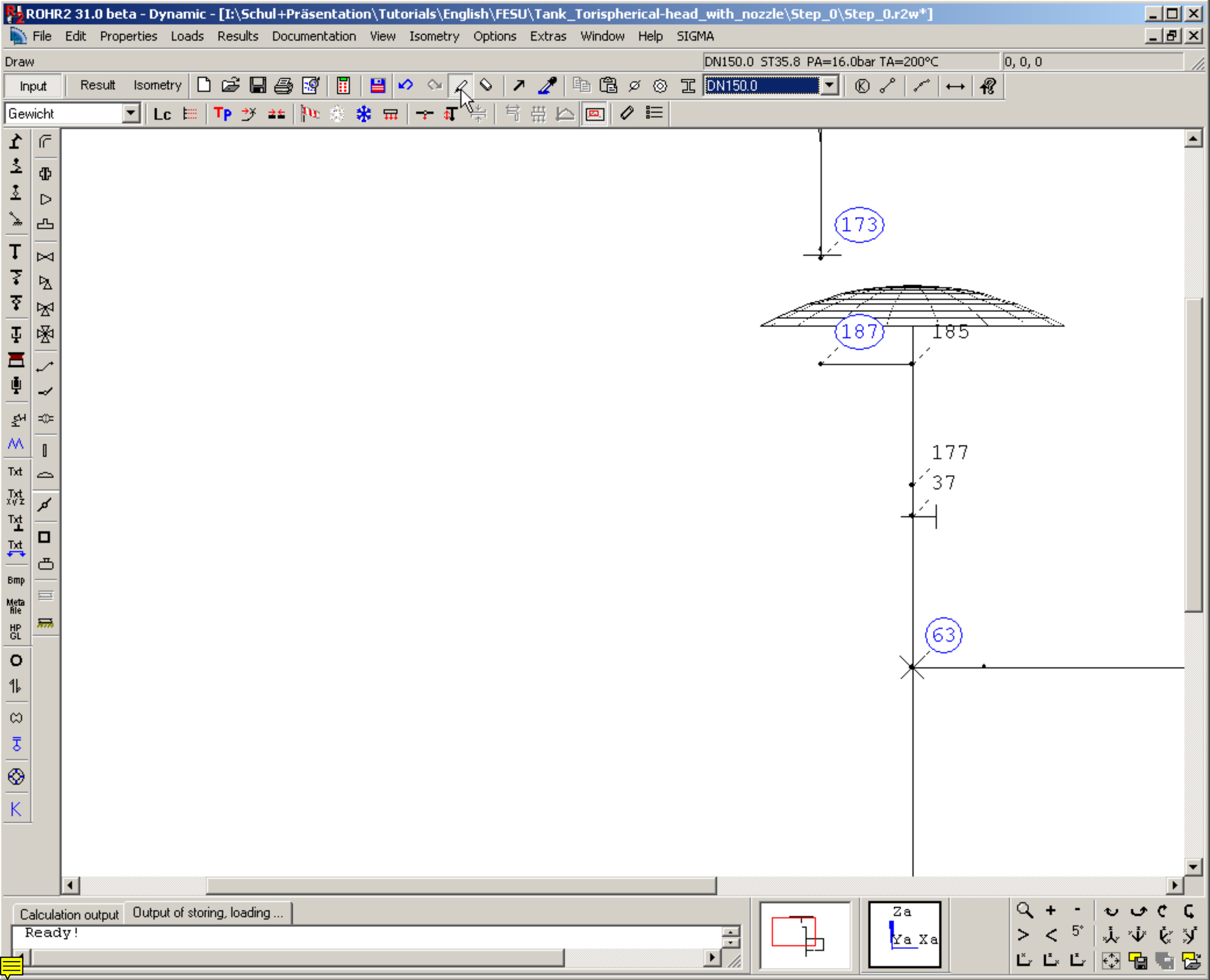
ROHR2 31.0 beta - Dynamic - [I:\Schul+Präsentation\Tutorials\English\FESU\Tank_Torispherical-head_with_nozzle\Step_0\Step_0.r2w*]
File Edit Properties Loads Results Documentation View Isometry Options Extras Window Help SIGMA
Draw
DN150.0 ST35.8 PA=16.0bar TA=200°C
0, 0, 0
Input Result Isometry
DN150.0
Gewicht
173
187
185
177
37
63
Calculation output
Output of storing, loading ...
Ready!

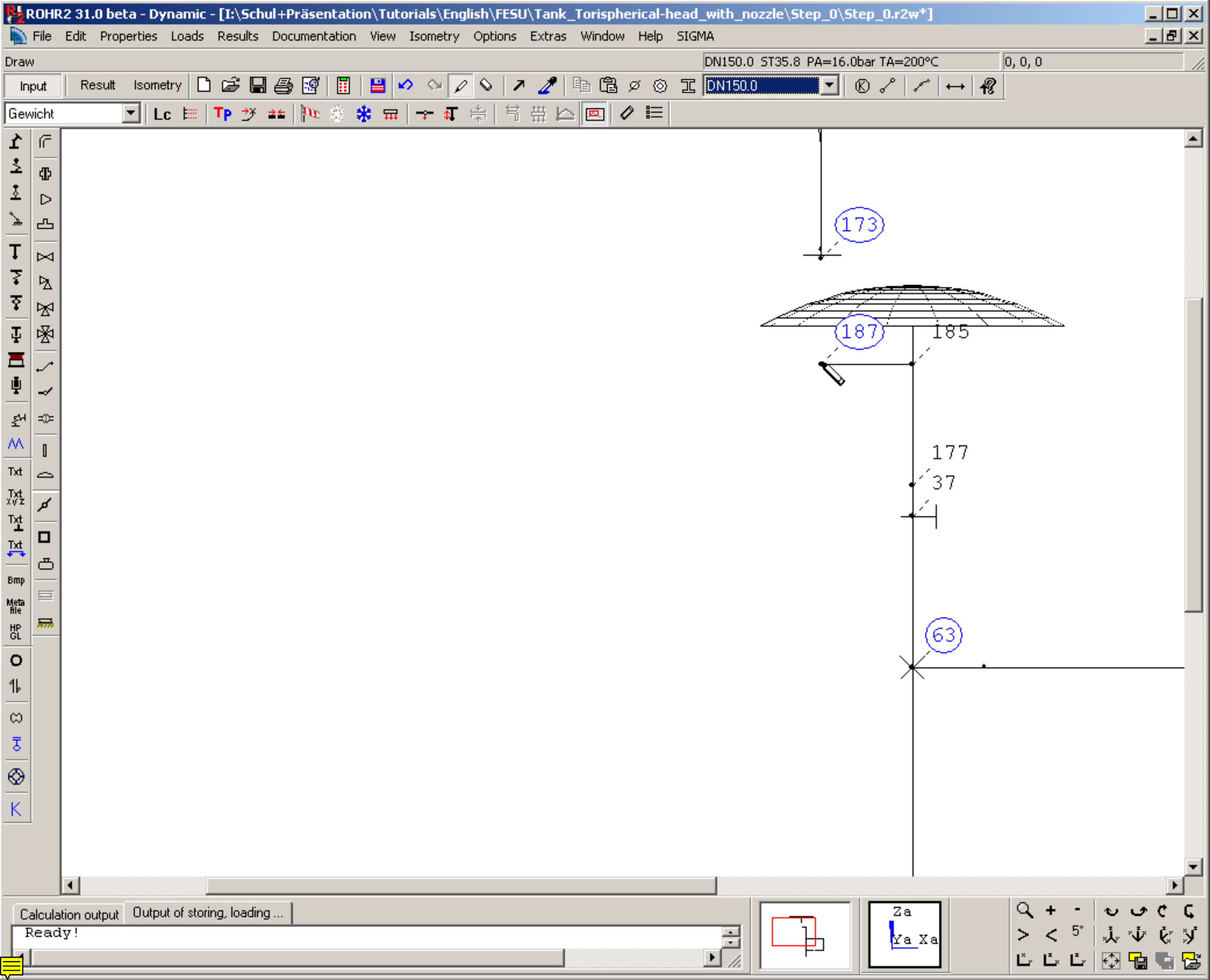
ROHR2 31.0 beta - Dynamic - [I:\Schul+Präsentation\Tutorials\English\FESU\Tank_Torispherical-head_with_nozzle\Step_0\Step_0.r2w*]
File Edit Properties Loads Results Documentation View Isometry Options Extras Window Help SIGMA
Draw
DN150.0 ST35.8 PA=16.0bar TA=200°C
0, 0, 0
Input Result Isometry
DN150.0
Gewicht
173
187
185
177
37
63
Calculation output
Output of storing, loading ...
Ready!

ROHR2 31.0 beta - Dynamic - [I:\Schul+Präsentation\Tutorials\English\FESU\Tank_Torispherical-head_with_nozzle\Step_0\Step_0.r2w*]

File Edit Properties Loads Results Documentation View Isometry Options Extras Window Help SIGMA

Draw | DN150.0 ST35.8 PA=16.0bar TA=200°C | 0, 0, 0

Input | Result | Isometry | DN150.0 | Gewicht | Lc | Tp

Difference coordinates

Node name 195 Reference node 187

DX 0 mm DY 0 mm DZ 0 mm No. of segments 1

☐ Absolute coordinates ☐ Data in local cs. of segment

Apply | Close | Back | Cylinder coord. | Spherical

Click here...

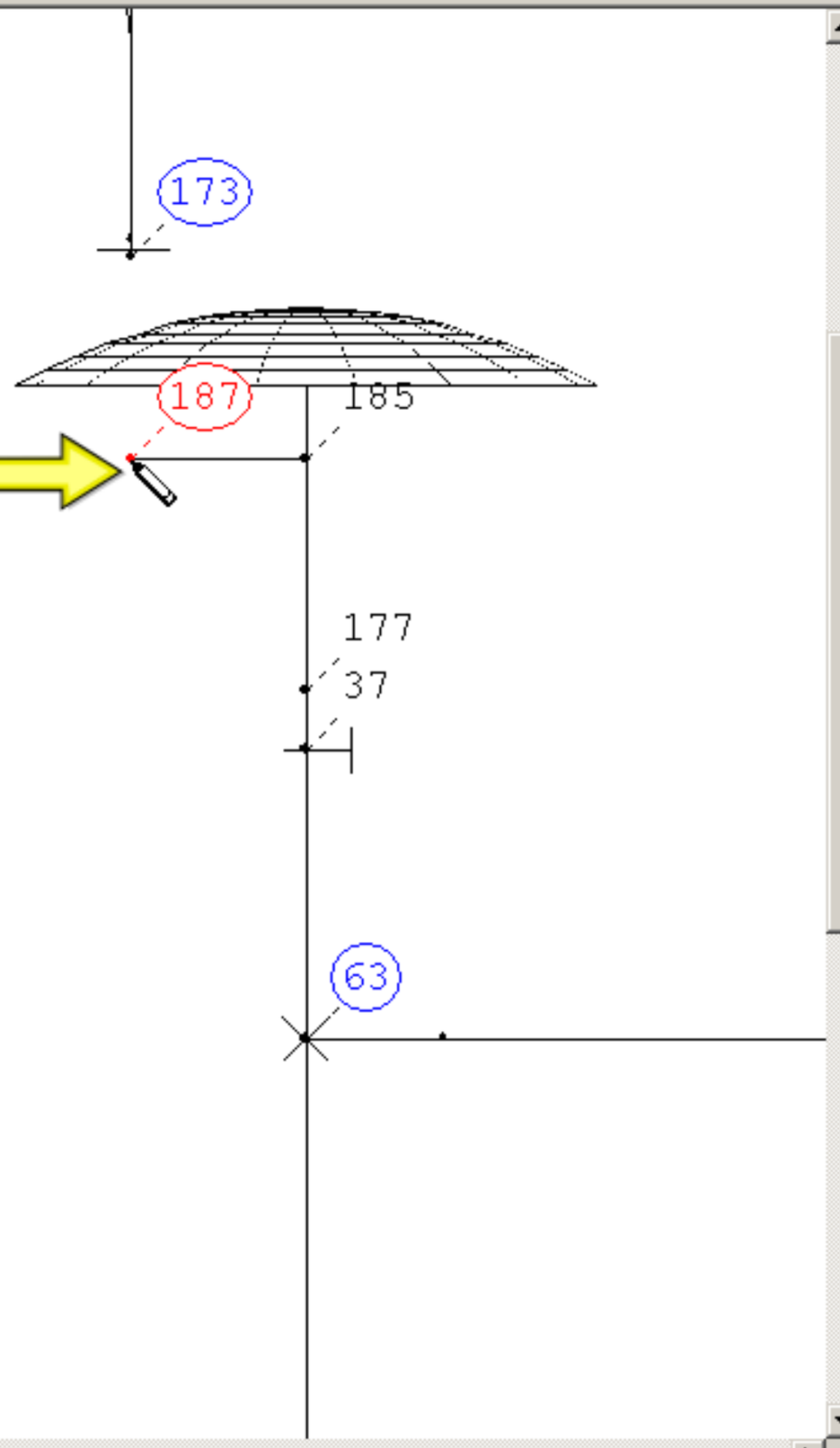

Calculation output | Output of storing, loading ...

Ready!

Za Ya Xa

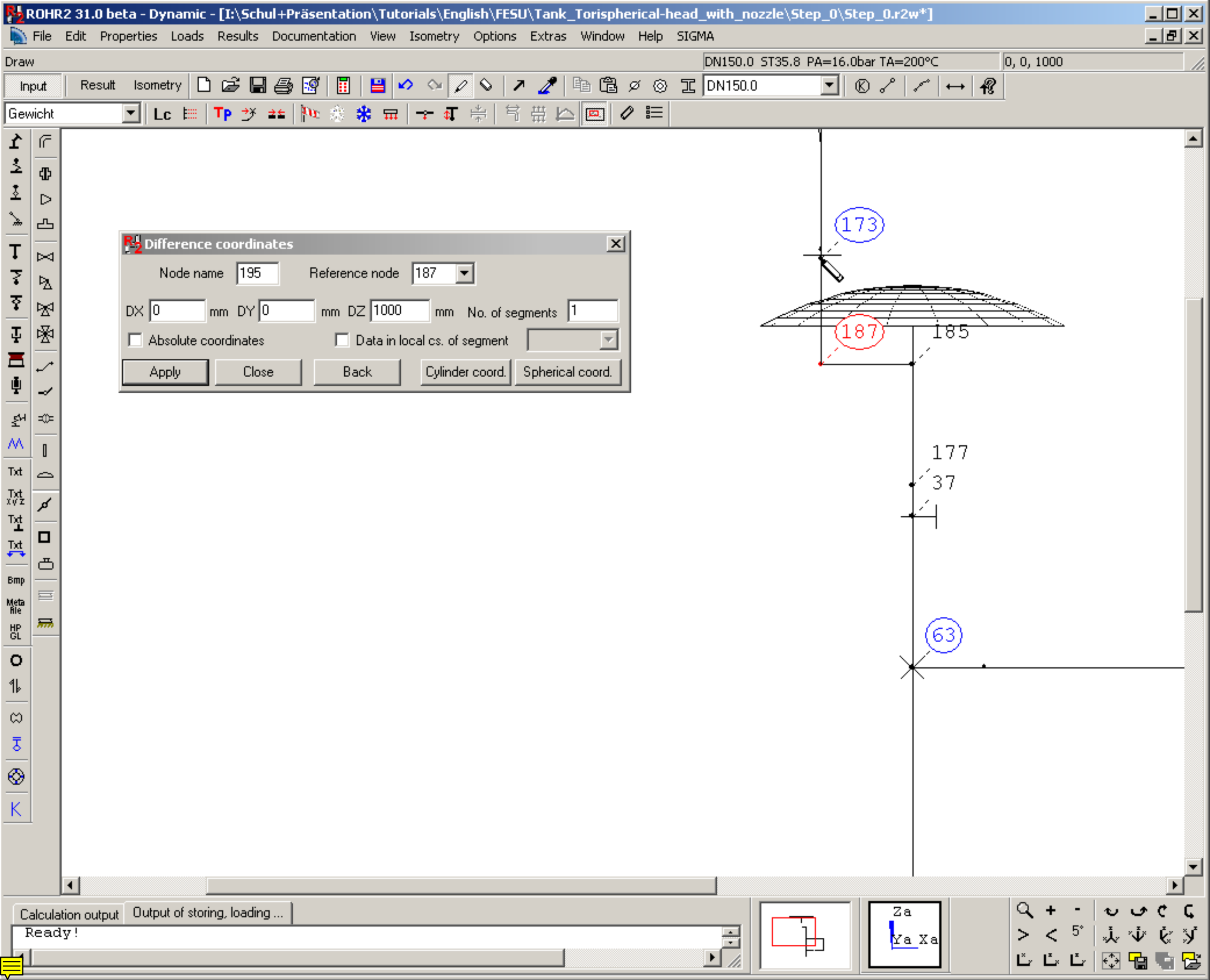
ROHR2 31.0 beta - Dynamic - [I:\Schul+Präsentation\Tutorials\English\FESU\Tank_Torispherical-head_with_nozzle\Step_0\Step_0.r2w*]
File Edit Properties Loads Results Documentation View Isometry Options Extras Window Help SIGMA
Draw
DN150.0 ST35.8 PA=16.0bar TA=200°C
0, 0, 1000
Input Result Isometry
DN150.0
Gewicht
Difference coordinates
Node name 195
Reference node 187
DX 0 mm DY 0 mm DZ 1000 mm No. of segments 1
Absolute coordinates
Data in local cs. of segment
Apply
Close
Back
Cylinder coord.
Spherical coord.
173
187
185
177
37
63
Calculation output
Output of storing, loading ...
Ready!

ROHR2 31.0 beta - Dynamic - [I:\Schul+Präsentation\Tutorials\English\FESU\Tank_Torispherical-head_with_nozzle\Step_0\Step_0.r2w*]

File Edit Properties Loads Results Documentation View Isometry Options Extras Window Help SIGMA

Draw | DN150.0 ST35.8 PA=16.0bar TA=200°C | 0, 0, 1000

Input | Result | Isometry | DN150.0 | Gewicht | Lc | Tp

Difference coordinates

Node name 197 Reference node 103

DX 0 mm DY 0 mm DZ 0 mm No. of segments 1

Absolute coordinates | Data in local cs. of segment

Apply | Close | Back | Cylinder coord. | Spherical coord.

.... and here

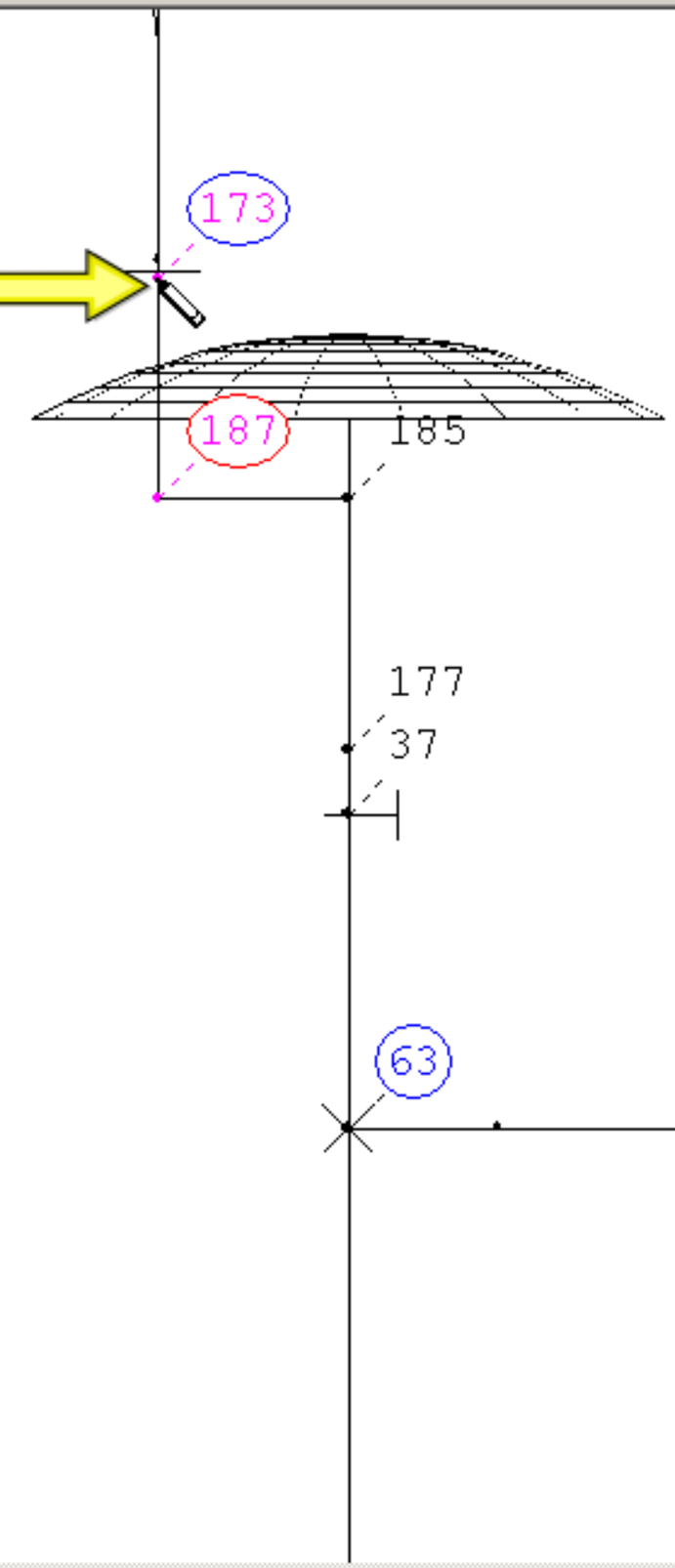

Calculation output | Output of storing, loading ...

Ready!

Za Ya Xa

ROHR2 31.0 beta - Dynamic - [I:\Schul+Präsentation\Tutorials\English\FESU\Tank_Torispherical-head_with_nozzle\Step_0\Step_0.r2w*]

File Edit Properties Loads Results Documentation View Isometry Options Extras Window Help SIGMA

Draw | DN150.0 ST35.8 PA=16.0bar TA=200°C | -4000, 0, 0

Input | Result | Isometry | DN150.0 | Gewicht | Lc

Difference coordinates

Node name 197 Reference node 103

DX -4000 mm DY 0 mm DZ 0 mm No. of segments 1

☐ Absolute coordinates ☐ Data in local cs. of segment

Apply | Close | Back | Cylinder coord. | Spherical coord.

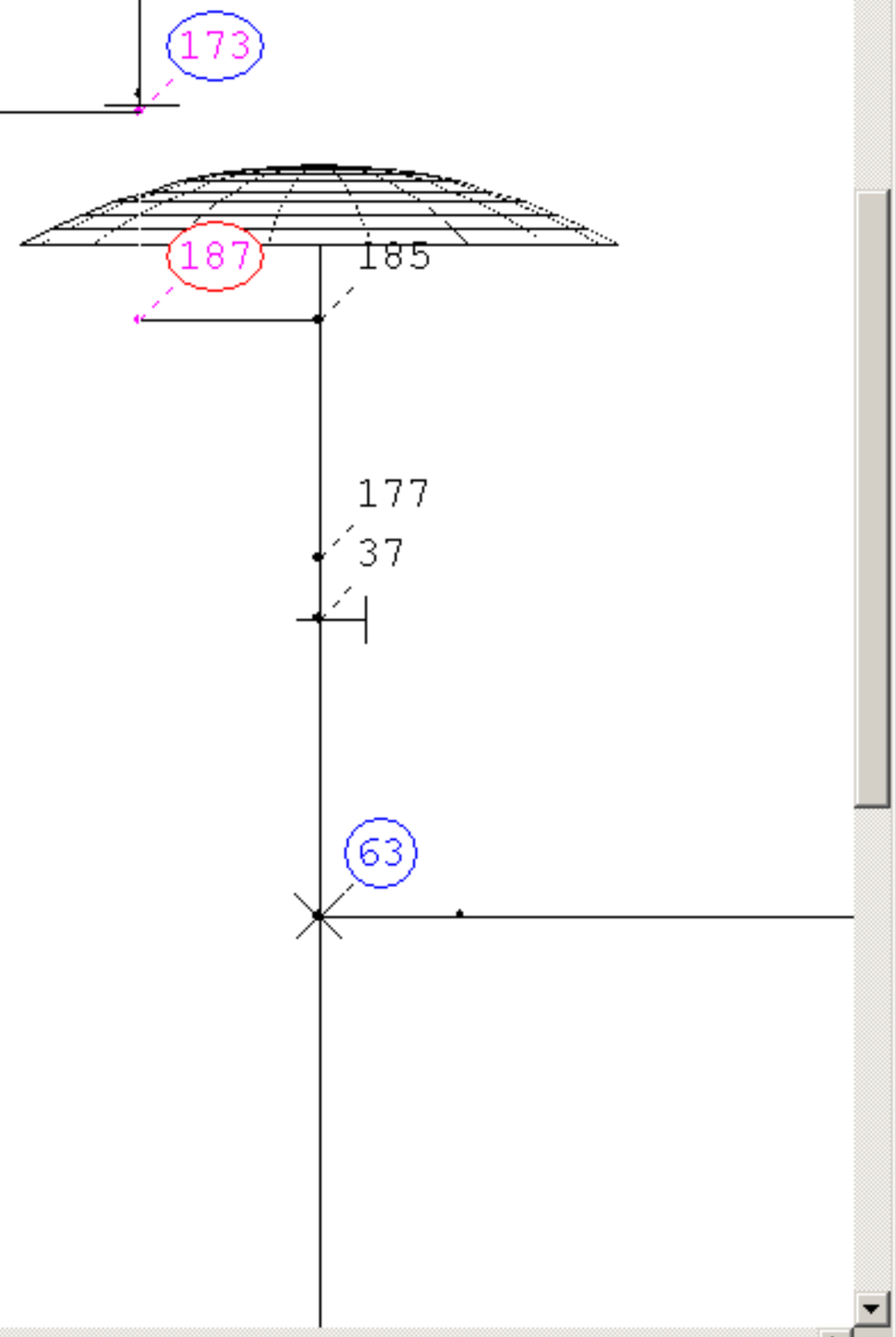

Calculation output | Output of storing, loading ...

Ready!

Za Ya Xa

ROHR2 31.0 beta - Dynamic - [I:\Schul+Präsentation\Tutorials\English\FESU\Tank_Torispherical-head_with_nozzle\Step_0\Step_0.r2w*]

File Edit Properties Loads Results Documentation View Isometry Options Extras Window Help SIGMA

Draw

DN150.0 ST35.8 PA=16.0bar TA=200°C

-5000, 0, 0

Input Result Isometry

DN150.0

Gewicht

Lc

Tp

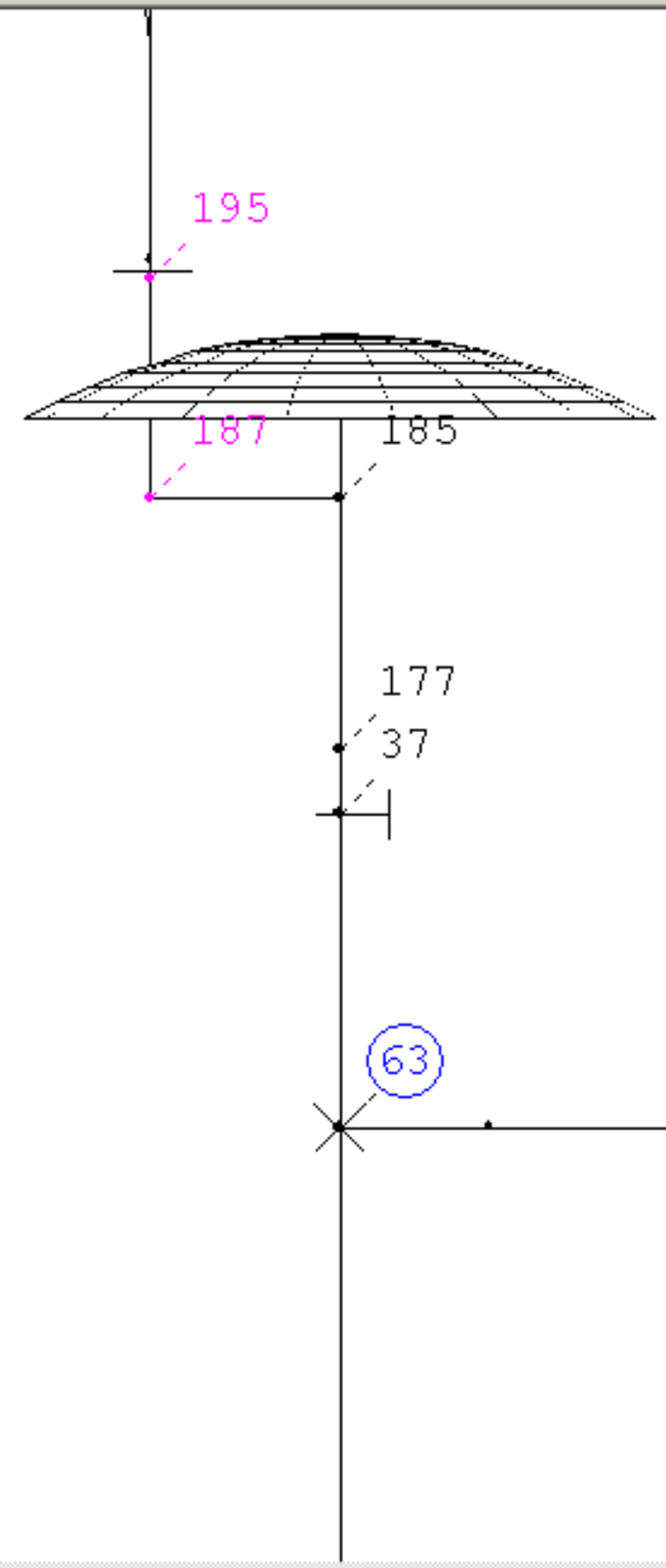

Calculation output

Output of storing, loading ...

Ready!

Za

Ya Xa

ROHR2 31.0 beta - Dynamic - [I:\Schul+Präsentation\Tutorials\English\FESU\Tank_Torispherical-head_with_nozzle\Step_0\Step_0.r2w*]

File Edit Properties Loads Results Documentation View Isometry Options Extras Window Help SIGMA

Draw

DN150.0 ST35.8 PA=16.0bar TA=200°C

-2000, 0, 0

Input Result Isometry

DN150.0

Gewicht

Lc

Tp

Txt Txt Txt Txt Bmp Meta file HP GL

195

187

185

177

37

63

Calculation output | Output of storing, loading ...

Ready!

Za

Ya Xa

5°

ROHR2 31.0 beta - Dynamic - [I:\Schul+Präsentation\Tutorials\English\FESU\Tank_Torispherical-head_with_nozzle\Step_0\Step_0.r2w*]

File Edit Properties Loads Results Documentation View Isometry Options Extras Window Help SIGMA

End function and refresh view

DN150.0 ST35.8 PA=16.0bar TA=200°C

0, 0, 0

Input Result Isometry

DN150.0

Gewicht

Lc

Tp

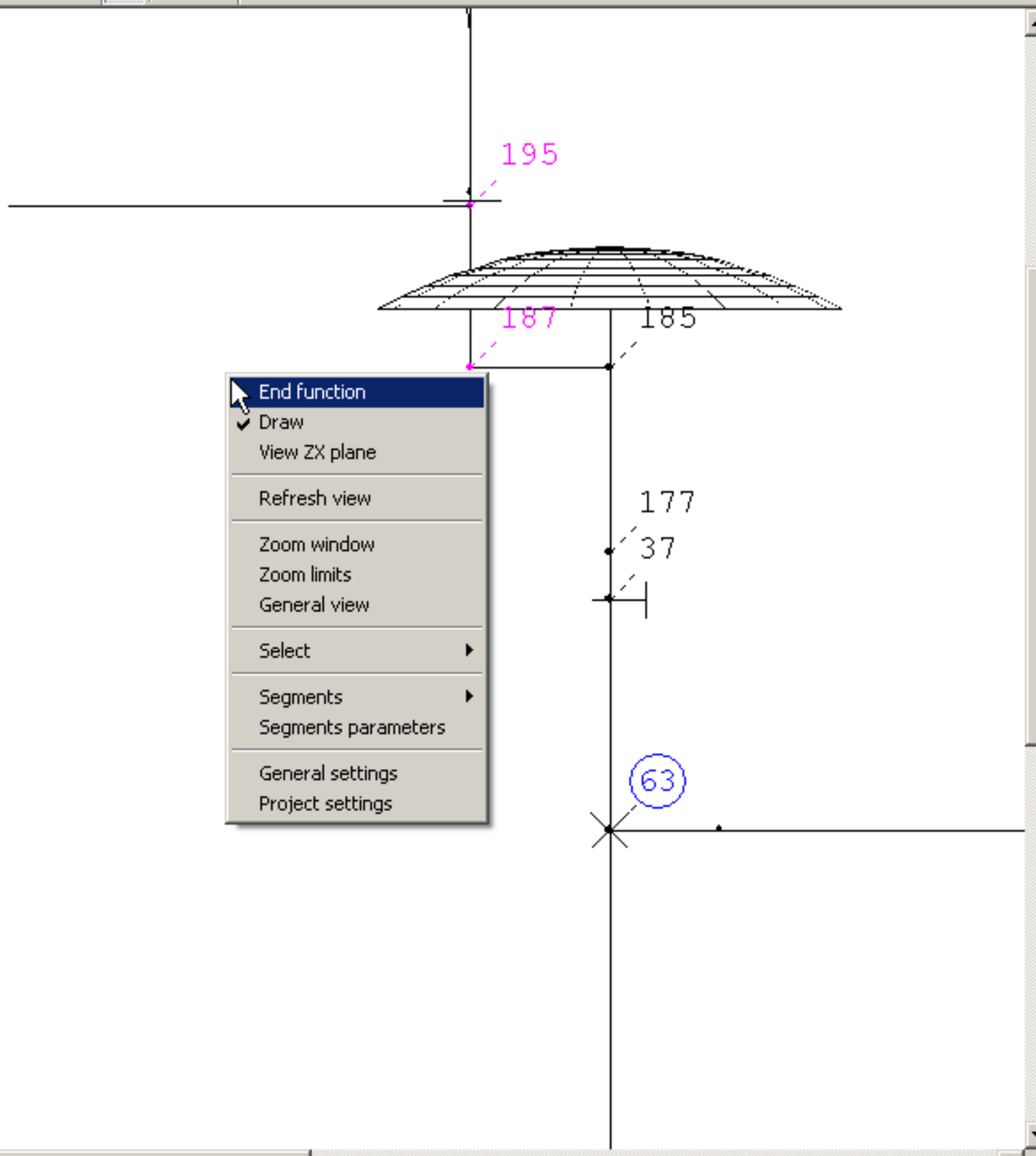

End function
Draw
View ZX plane
Refresh view
Zoom window
Zoom limits
General view
Select
Segments
Segments parameters
General settings
Project settings

Calculation output | Output of storing, loading ...

Ready!

Za
Ya Xa

ROHR2 31.0 beta - Dynamic - [I:\Schul+Präsentation\Tutorials\English\FESU\Tank_Torispherical-head_with_nozzle\Step_0\Step_0.r2w*]

File Edit Properties Loads Results Documentation View Isometry Options Extras Window Help SIGMA

End function and refresh view

DN150.0 ST35.8 PA=16.0bar TA=200°C

0, 0, 0

Input Result Isometry

DN150.0

Gewicht

Lc

Tp

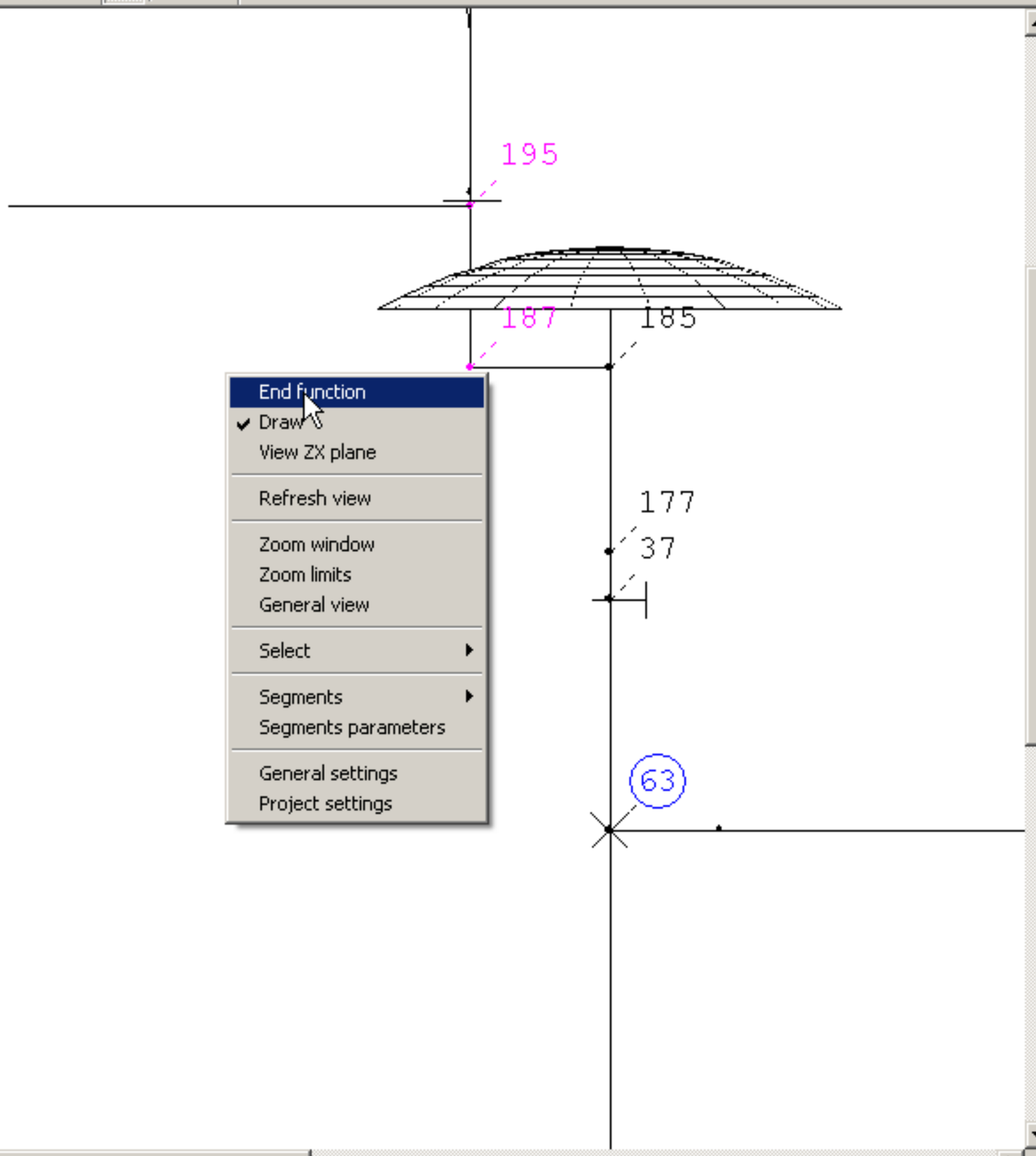

End function
Draw
View ZX plane
Refresh view
Zoom window
Zoom limits
General view
Select
Segments
Segments parameters
General settings
Project settings

Calculation output | Output of storing, loading ...

Ready!

Za
Ya Xa

ROHR2 31.0 beta - Dynamic - [I:\Schul+Präsentation\Tutorials\English\FESU\Tank_Torispherical-head_with_nozzle\Step_0\Step_0.r2w*]

File Edit Properties Loads Results Documentation View Isometry Options Extras Window Help SIGMA

F1 for Help

DN150.0 ST35.8 PA=16.0bar TA=200°C

0, 0, 0

Input Result Isometry

DN150.0

Gewicht

Lc

Tp

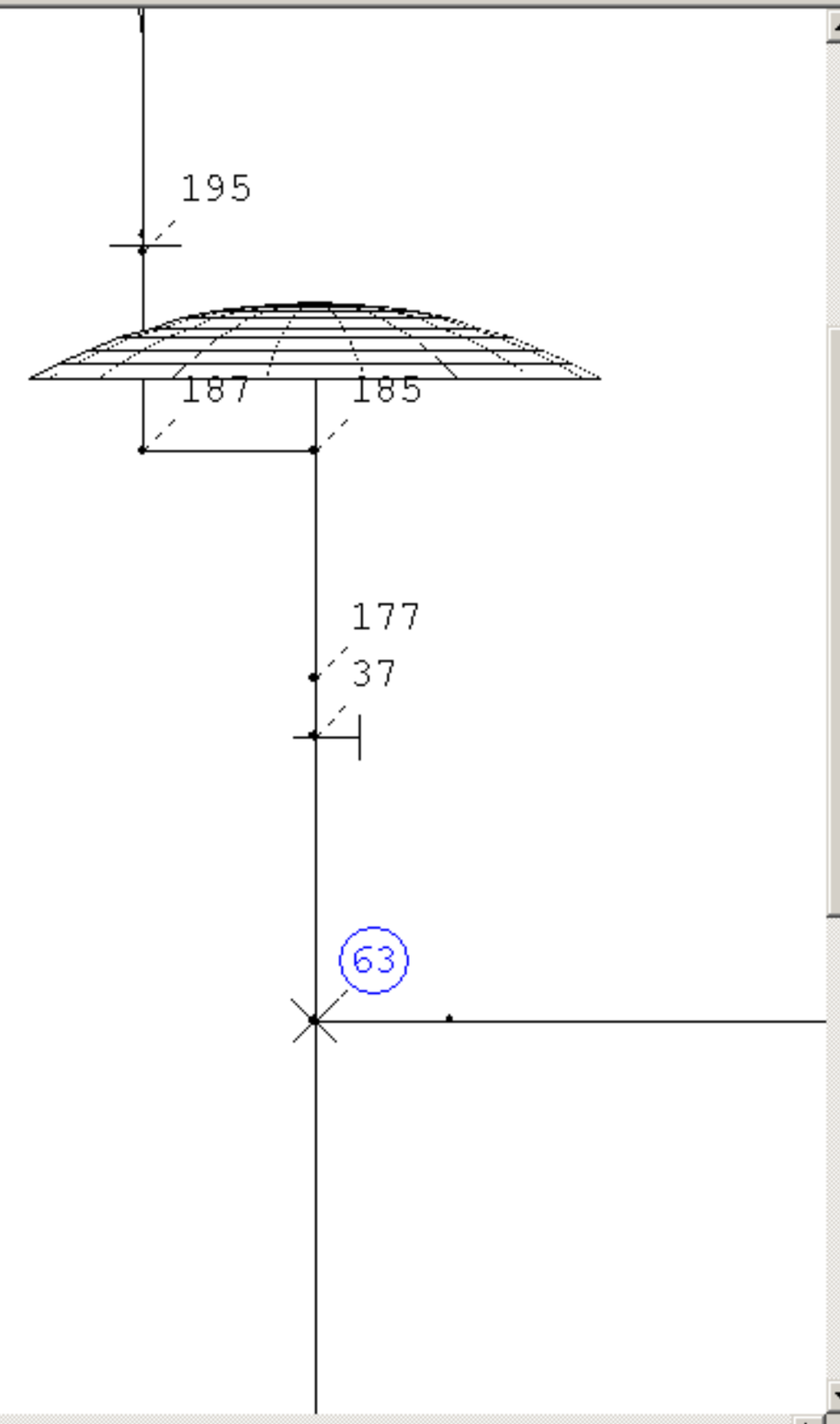

Calculation output

Output of storing, loading ...

Ready!

Za

Ya Xa

ROHR2 31.0 beta - Dynamic - [I:\Schul+Präsentation\Tutorials\English\FESU\Tank_Torispherical-head_with_nozzle\Step_0\Step_0.r2w*]

File Edit Properties Loads Results Documentation View Isometry Options Extras Window Help SIGMA

Insert flange

DN150.0 ST35.8 PA=16.0bar TA=200°C

0, 0, 0

Input Result Isometry

DN150.0

Gewicht

Define the flange for the nozzle

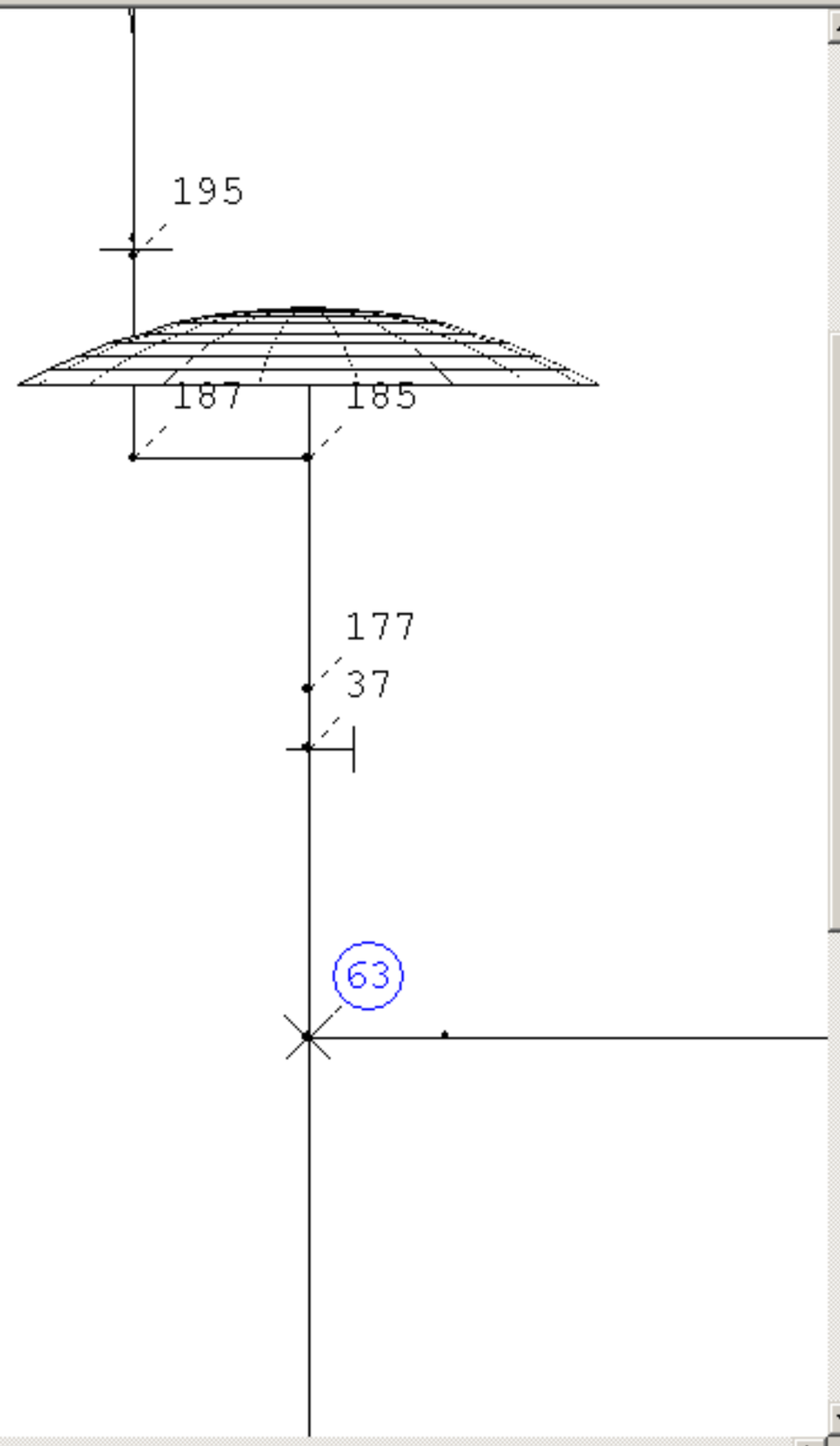

Calculation output

Output of storing, loading ...

Ready!

Za
Ya Xa

ROHR2 31.0 beta - Dynamic - [I:\Schul+Präsentation\Tutorials\English\FESU\Tank_Torispherical-head_with_nozzle\Step_0\Step_0.r2w*]

File Edit Properties Loads Results Documentation View Isometry Options Extras Window Help SIGMA

Insert flange

DN150.0 ST35.8 PA=16.0bar TA=200°C

0, 0, 0

Input Result Isometry

DN150.0

Gewicht

user defined

EN 1092-1/11/PN16
EN 1092-1/11/PN25
EN 1092-1/11/PN40
EN 1092-1/11/PN63
EN 1092-1/11/PN100
DIN 2630
DIN 2631
DIN 2632
DIN 2633
DIN 2634
DIN 2635
DIN 2636
DIN 2637
DIN 2638
DIN 2628
DIN 2629

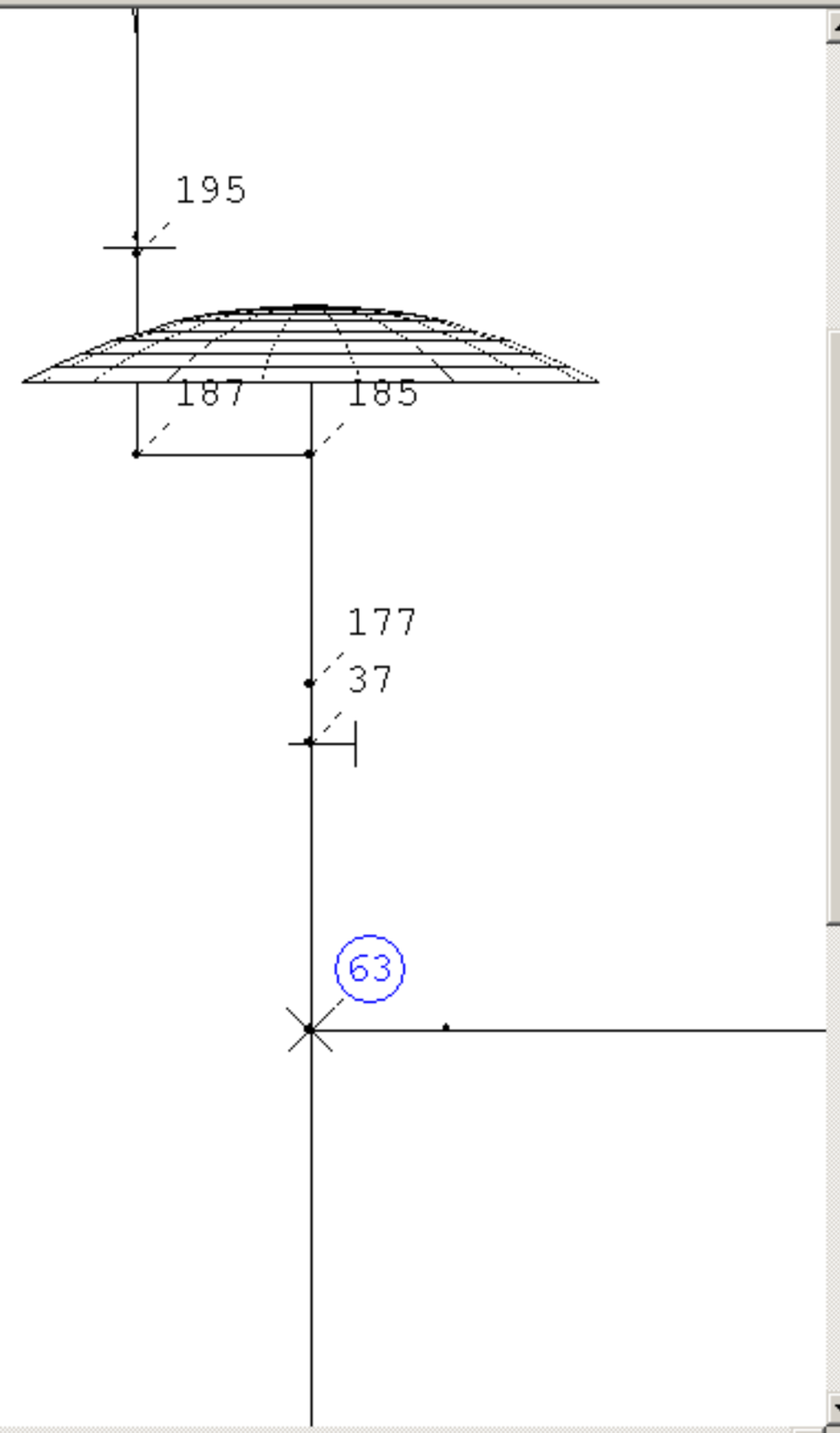

Calculation output | Output of storing, loading ...

Ready!

Za
Ya Xa

ROHR2 31.0 beta - Dynamic - [I:\Schul+Präsentation\Tutorials\English\FESU\Tank_Torispherical-head_with_nozzle\Step_0\Step_0.r2w*]

File Edit Properties Loads Results Documentation View Isometry Options Extras Window Help SIGMA

Insert flange | DN150.0 ST35.8 PA=16.0bar TA=200°C | 0, 0, 0

Input | Result | Isometry | DN150.0 | Gewicht | Lc

user defined

EN 1092-1/11/PN16
EN 1092-1/11/PN25
EN 1092-1/11/PN40
EN 1092-1/11/PN63
EN 1092-1/11/PN100
DIN 2630
DIN 2631
DIN 2632
DIN 2633
DIN 2634
DIN 2635
DIN 2636
DIN 2637
DIN 2638
DIN 2628
DIN 2629

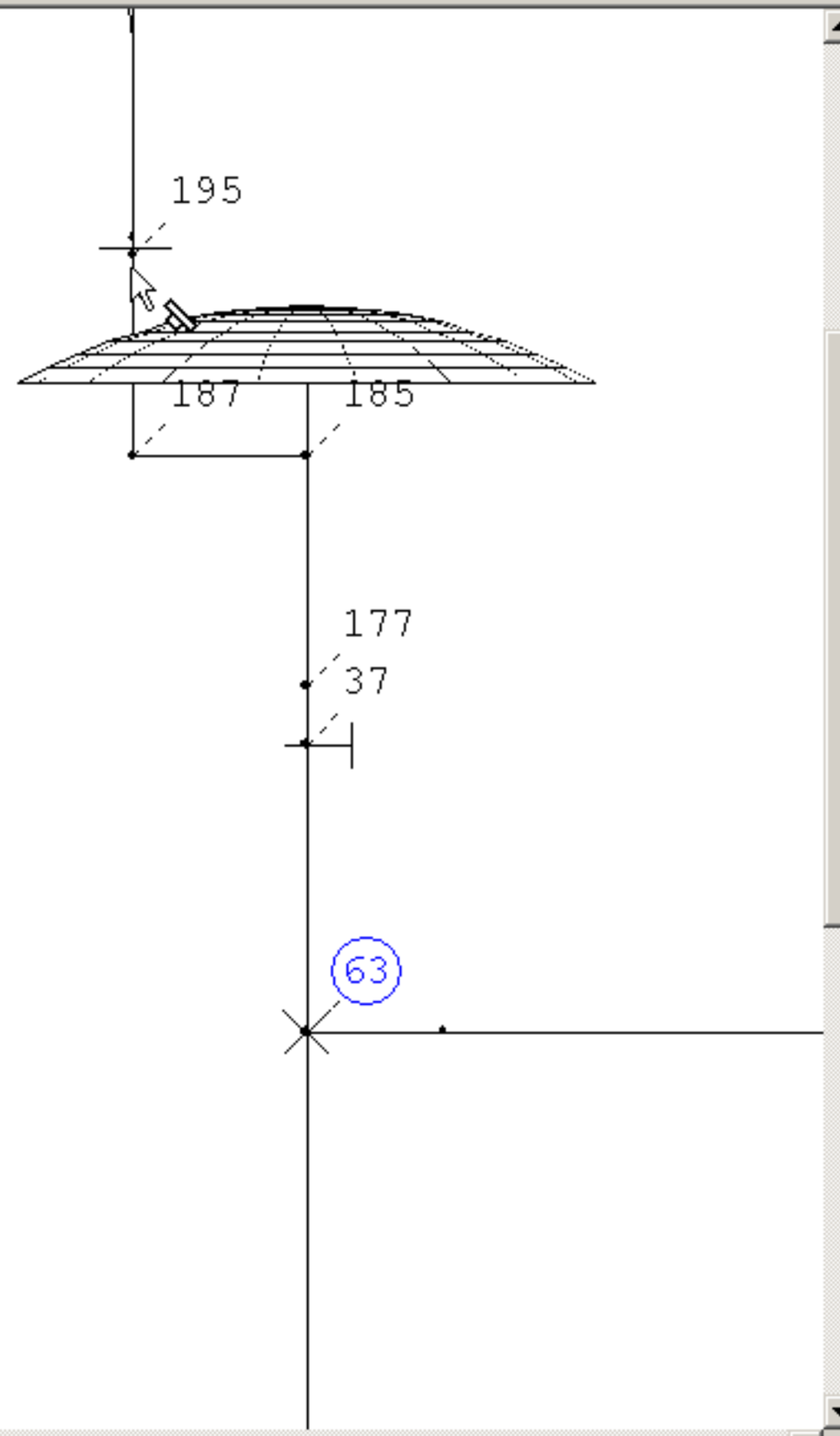

Txt Txt Txt Bmp Meta file HP GL

Calculation output | Output of storing, loading ...

Ready!

Za Ya Xa

ROHR2 31.0 beta - Dynamic - [I:\Schul+Präsentation\Tutorials\English\FESU\Tank_Torispherical-head_with_nozzle\Step_0\Step_0.r2w*]

File Edit Properties Loads Results Documentation View Isometry Options Extras Window Help SIGMA

Insert flange

DN150.0 ST35.8 PA=16.0bar TA=200°C

0, 0, 0

Input Result Isometry

DN150.0

Gewicht

Lc

Tp

user defined

EN 1092-1/11/PN16
EN 1092-1/11/PN25
EN 1092-1/11/PN40
EN 1092-1/11/PN63
EN 1092-1/11/PN100
DIN 2630
DIN 2631
DIN 2632
DIN 2633
DIN 2634
DIN 2635
DIN 2636
DIN 2637
DIN 2638
DIN 2628
DIN 2629

Element

Flange

Nom. diameter DN150.0 Nom. pressure 16 bar

Norm: EN 1092-1/11/PN16

user defined show all norms

Length 55 mm Mass 7.5 kg

Description:

OK Abbrechen Übernehmen Hilfe

195

187 185

177

37

63

Calculation output Output of storing, loading ...

Ready!

Za

Ya Xa

ROHR2 31.0 beta - Dynamic - [I:\Schul+Präsentation\Tutorials\English\FESU\Tank_Torispherical-head_with_nozzle\Step_0\Step_0.r2w*]

File Edit Properties Loads Results Documentation View Isometry Options Extras Window Help SIGMA

Insert flange

DN150.0 ST35.8 PA=16.0bar TA=200°C

0, 0, 0

Input Result Isometry

DN150.0

Gewicht

user defined

EN 1092-1/11/PN16
EN 1092-1/11/PN25
EN 1092-1/11/PN40
EN 1092-1/11/PN63
EN 1092-1/11/PN100
DIN 2630
DIN 2631
DIN 2632
DIN 2633
DIN 2634
DIN 2635
DIN 2636
DIN 2637
DIN 2638
DIN 2628
DIN 2629

Element

Flange

Nom. diameter DN150.0 Nom. pressure 16 bar

Norm: EN 1092-1/11/PN16

user defined show all norms

Length 55 mm Mass 7.5 kg

Description:

OK Abbrechen Übernehmen Hilfe

195
187
185
177
37
63

Calculation output Output of storing, loading ...

Ready!

Za
Ya Xa

ROHR2 31.0 beta - Dynamic - [I:\Schul+Präsentation\Tutorials\English\FESU\Tank_Torispherical-head_with_nozzle\Step_0\Step_0.r2w*]

File Edit Properties Loads Results Documentation View Isometry Options Extras Window Help SIGMA

Insert flange

DN150.0 ST35.8 PA=16.0bar TA=200°C

0, 0, 0

Input Result Isometry

DN150.0

Gewicht

Lc

Tp

user defined

EN 1092-1/11/PN16
EN 1092-1/11/PN25
EN 1092-1/11/PN40
EN 1092-1/11/PN63
EN 1092-1/11/PN100
DIN 2630
DIN 2631
DIN 2632
DIN 2633
DIN 2634
DIN 2635
DIN 2636
DIN 2637
DIN 2638
DIN 2628
DIN 2629

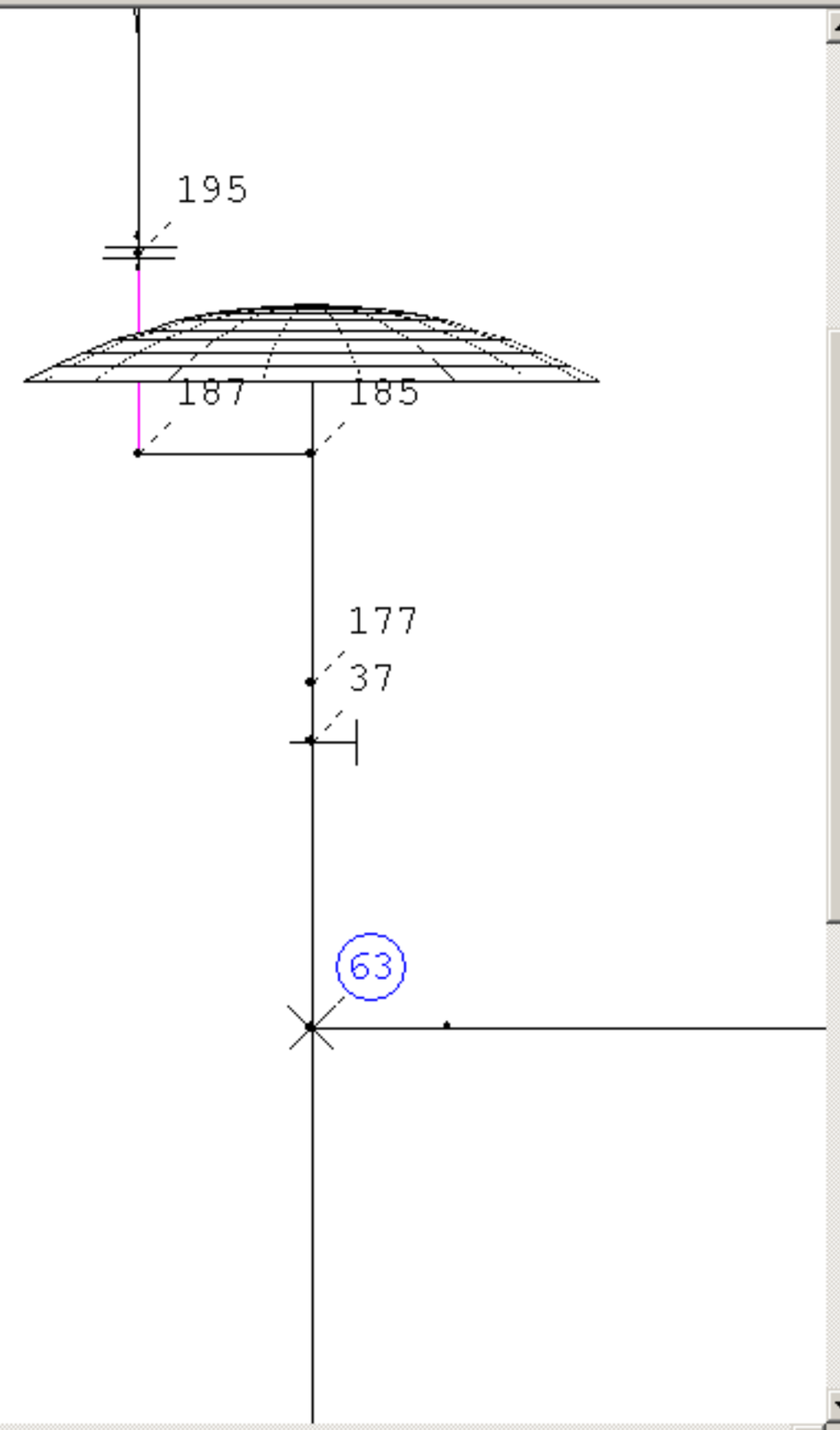

Txt
Txt
Txt
Bmp
Meta file
HP GL

Calculation output

Output of storing, loading ...

Ready!

Za
Ya Xa

ROHR2 31.0 beta - Dynamic - [I:\Schul+Präsentation\Tutorials\English\FESU\Tank_Torispherical-head_with_nozzle\Step_0\Step_0.r2w*]

File Edit Properties Loads Results Documentation View Isometry Options Extras Window Help SIGMA

Insert flange

DN150.0 ST35.8 PA=16.0bar TA=200°C

0, 0, 0

Input Result Isometry

DN150.0

Gewicht

Lc

Tp

user defined

EN 1092-1/11/PN16
EN 1092-1/11/PN25
EN 1092-1/11/PN40
EN 1092-1/11/PN63
EN 1092-1/11/PN100
DIN 2630
DIN 2631
DIN 2632
DIN 2633
DIN 2634
DIN 2635
DIN 2636
DIN 2637
DIN 2638
DIN 2628
DIN 2629

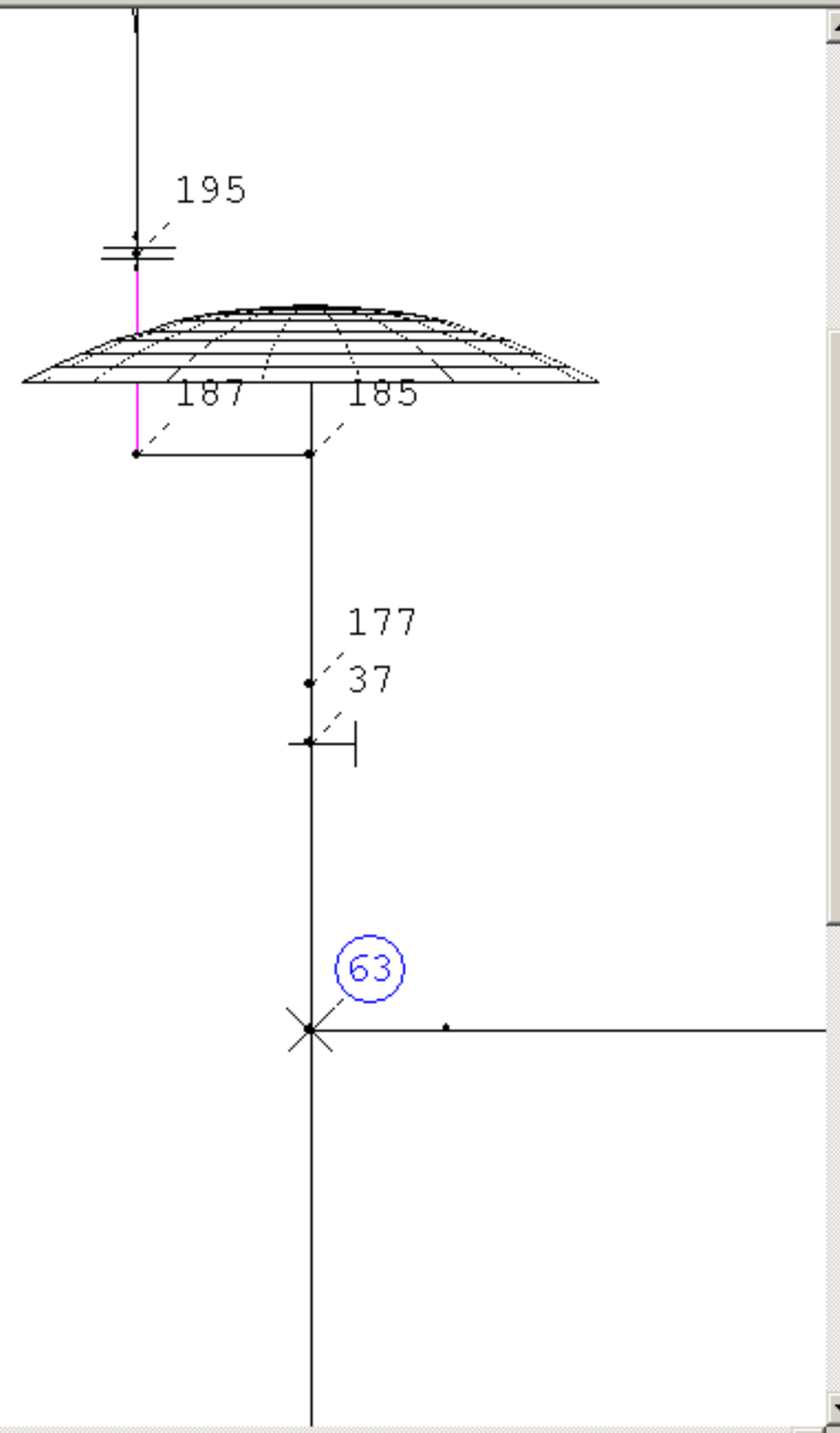

Txt
Txt
Txt
Bmp
Meta file
HP GL

Calculation output

Output of storing, loading ...

Ready!

Za
Ya Xa

ROHR2 31.0 beta - Dynamic - [I:\Schul+Präsentation\Tutorials\English\FESU\Tank_Torispherical-head_with_nozzle\Step_0\Step_0.r2w*]

File Edit Properties Loads Results Documentation View Isometry Options Extras Window Help SIGMA

Insert flange

DN150.0 ST35.8 PA=16.0bar TA=200°C

0, 0, 0

Input Result Isometry

DN150.0

Gewicht

user defined

EN 1092-1/11/PN16
EN 1092-1/11/PN25
EN 1092-1/11/PN40
EN 1092-1/11/PN63
EN 1092-1/11/PN100
DIN 2630
DIN 2631
DIN 2632
DIN 2633
DIN 2634
DIN 2635
DIN 2636
DIN 2637
DIN 2638
DIN 2628
DIN 2629

End function
Flange
Draw
View ZX plane
Refresh view
Zoom window
Zoom limits
General view
Select
Segments
Segments parameters
General settings
Project settings

195
187
185
177
37
63

Calculation output
Output of storing, loading ...
Ready!

Za
Ya Xa

ROHR2 31.0 beta - Dynamic - [I:\Schul+Präsentation\Tutorials\English\FESU\Tank_Torispherical-head_with_nozzle\Step_0\Step_0.r2w*]

File Edit Properties Loads Results Documentation View Isometry Options Extras Window Help SIGMA

End function and refresh view

DN150.0 ST35.8 PA=16.0bar TA=200°C

0, 0, 0

Input Result Isometry

DN150.0

Gewicht

Lc

Tp

user defined

EN 1092-1/11/PN16
EN 1092-1/11/PN25
EN 1092-1/11/PN40
EN 1092-1/11/PN63
EN 1092-1/11/PN100
DIN 2630
DIN 2631
DIN 2632
DIN 2633
DIN 2634
DIN 2635
DIN 2636
DIN 2637
DIN 2638
DIN 2628
DIN 2629

End function
Flange
Draw
View ZX plane

Refresh view

Zoom window
Zoom limits
General view

Select

Segments
Segments parameters

General settings
Project settings

195

187

185

177

37

63

Calculation output

Output of storing, loading ...

Ready!

Za

Ya Xa

ROHR2 31.0 beta - Dynamic - [I:\Schul+Präsentation\Tutorials\English\FESU\Tank_Torispherical-head_with_nozzle\Step_0\Step_0.r2w*]

File Edit Properties Loads Results Documentation View Isometry Options Extras Window Help SIGMA

F1 for Help

DN150.0 ST35.8 PA=16.0bar TA=200°C

0, 0, 0

Input Result Isometry

DN150.0

Gewicht

Lc

Tp

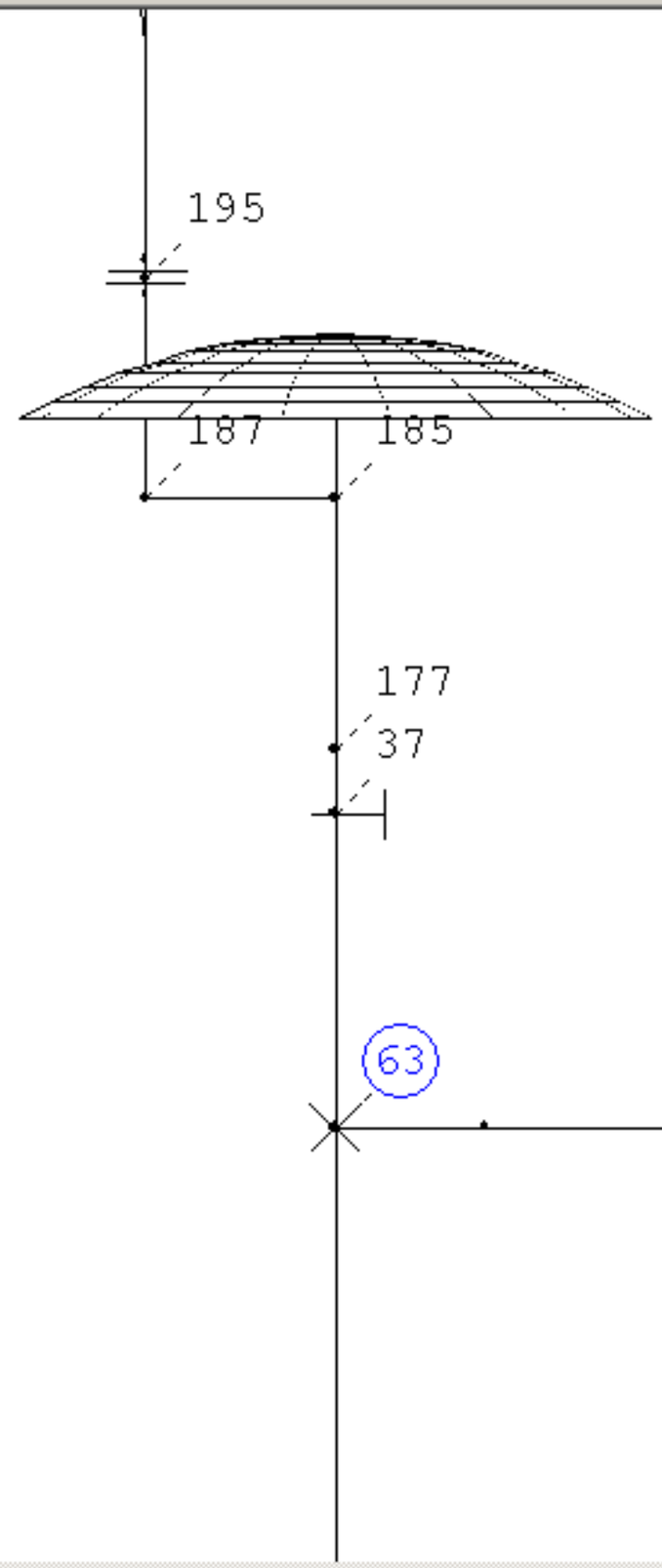

Calculation output

Output of storing, loading ...

Ready!

Za

Ya Xa

ROHR2 31.0 beta - Dynamic - [I:\Schul+Präsentation\Tutorials\English\FESU\Tank_Torispherical-head_with_nozzle\Step_0\Step_0.r2w*]

File Edit Properties Loads Results Documentation View Isometry Options Extras Window Help SIGMA

Show dimensions | DN150.0 ST35.8 PA=16.0bar TA=200°C | 0, 0, 0

Input | Result | Isometry | DN150.0 | Gewicht | Lc

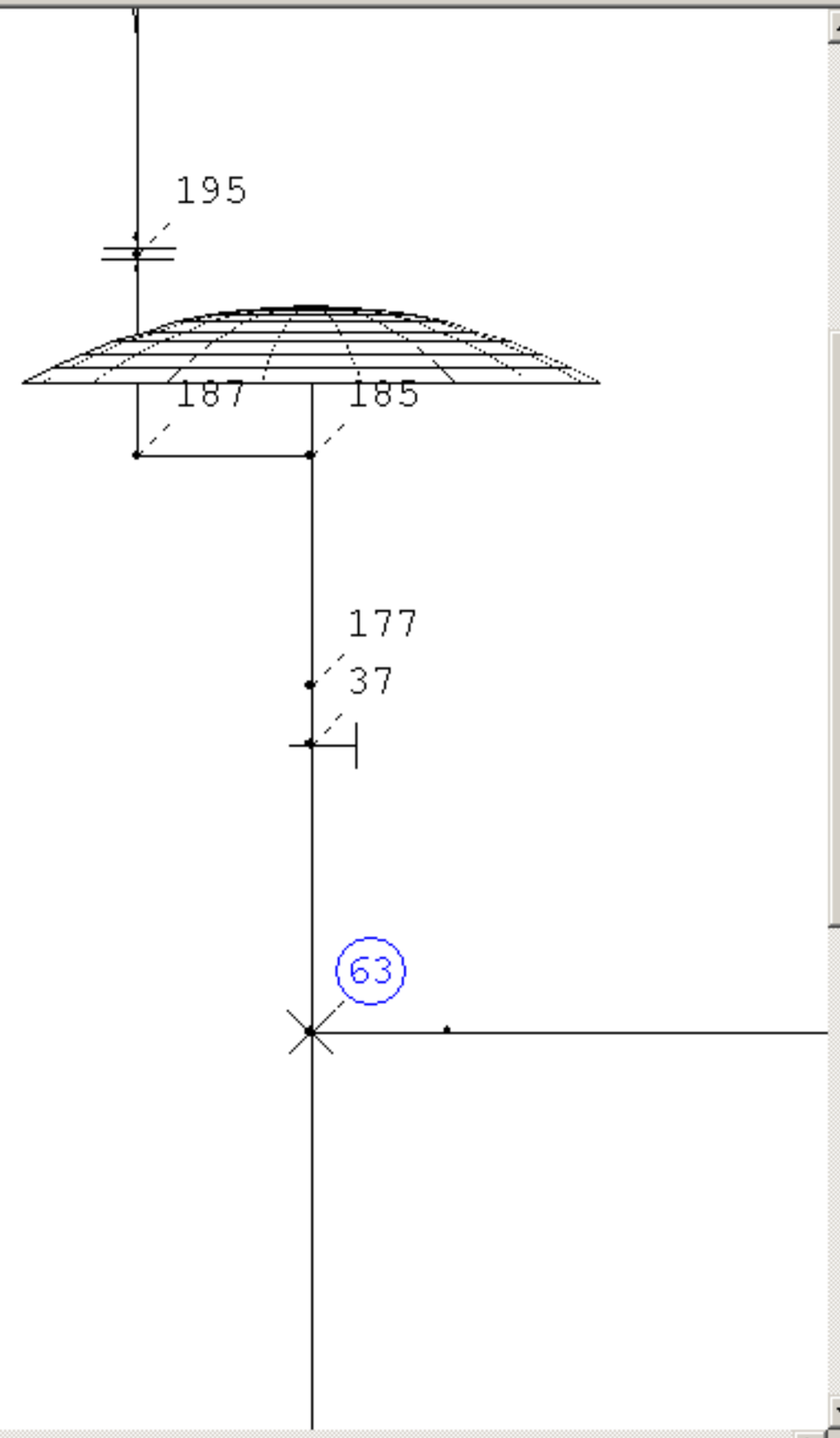

Calculation output | Output of storing, loading ...

Ready!

Za
Ya Xa

ROHR2 31.0 beta - Dynamic - [I:\Schul+Präsentation\Tutorials\English\FESU\Tank_Torispherical-head_with_nozzle\Step_0\Step_0.r2w*]

File Edit Properties Loads Results Documentation View Isometry Options Extras Window Help SIGMA

F1 for Help

DN150.0 ST35.8 PA=16.0bar TA=200°C

0, 0, 0

Input Result Isometry

DN150.0

Gewicht

Lc

Tp

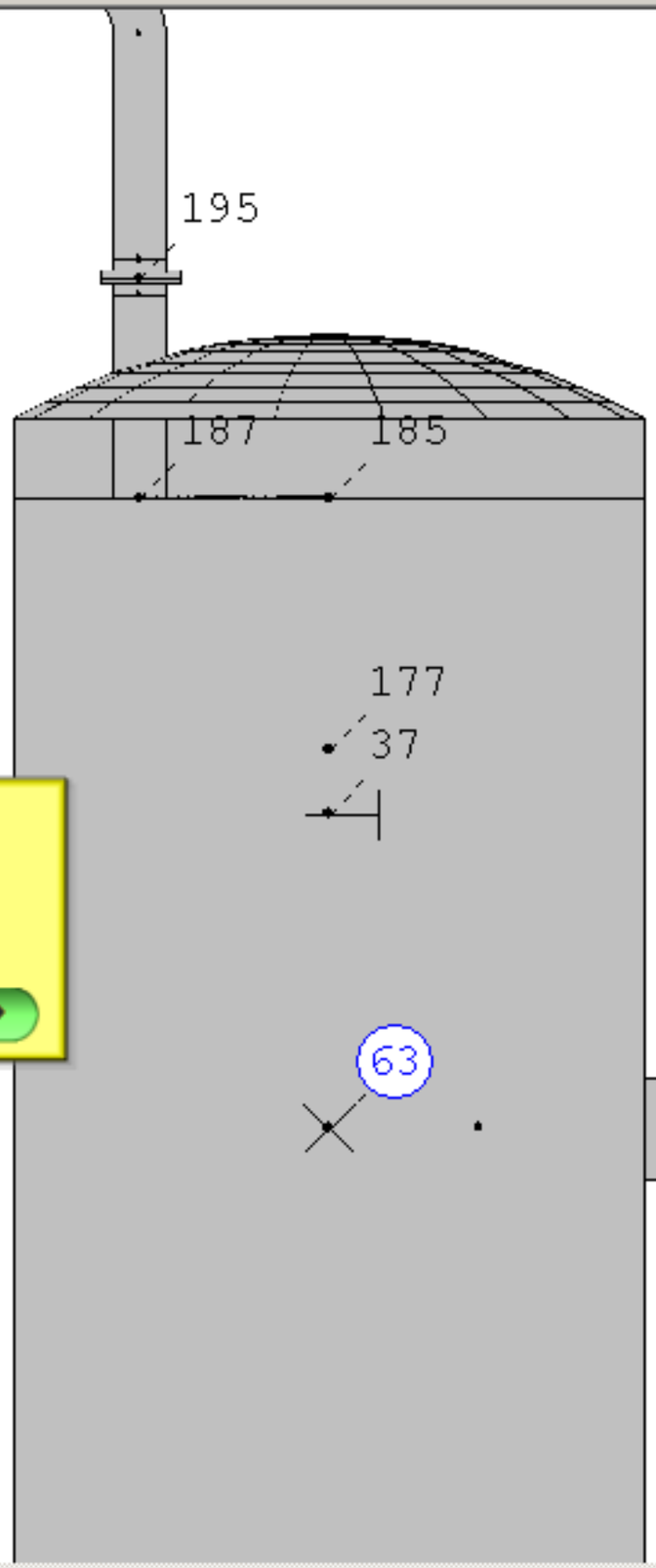

ROHR2-Model is complete now.

Calculation output

Output of storing, loading ...

Ready!

Za
Ya Xa

ROHR2 31.0 beta - Dynamic - [I:\Schul+Präsentation\Tutorials\English\FESU\Tank_Torispherical-head_with_nozzle\Step_0\Step_0.r2w*]

File Edit Properties Loads Results Documentation View Isometry Options Extras Window Help SIGMA

F1 for Help

DN150.0 ST35.8 PA=16.0bar TA=200°C

0, 0, 0

Input Result Isometry

DN150.0

Gewicht

You must define transitions points for the beam to shell model. It is useful to to create the point in a region with high stiffness.

A suitable place for this points is a flange or a plate from a support.

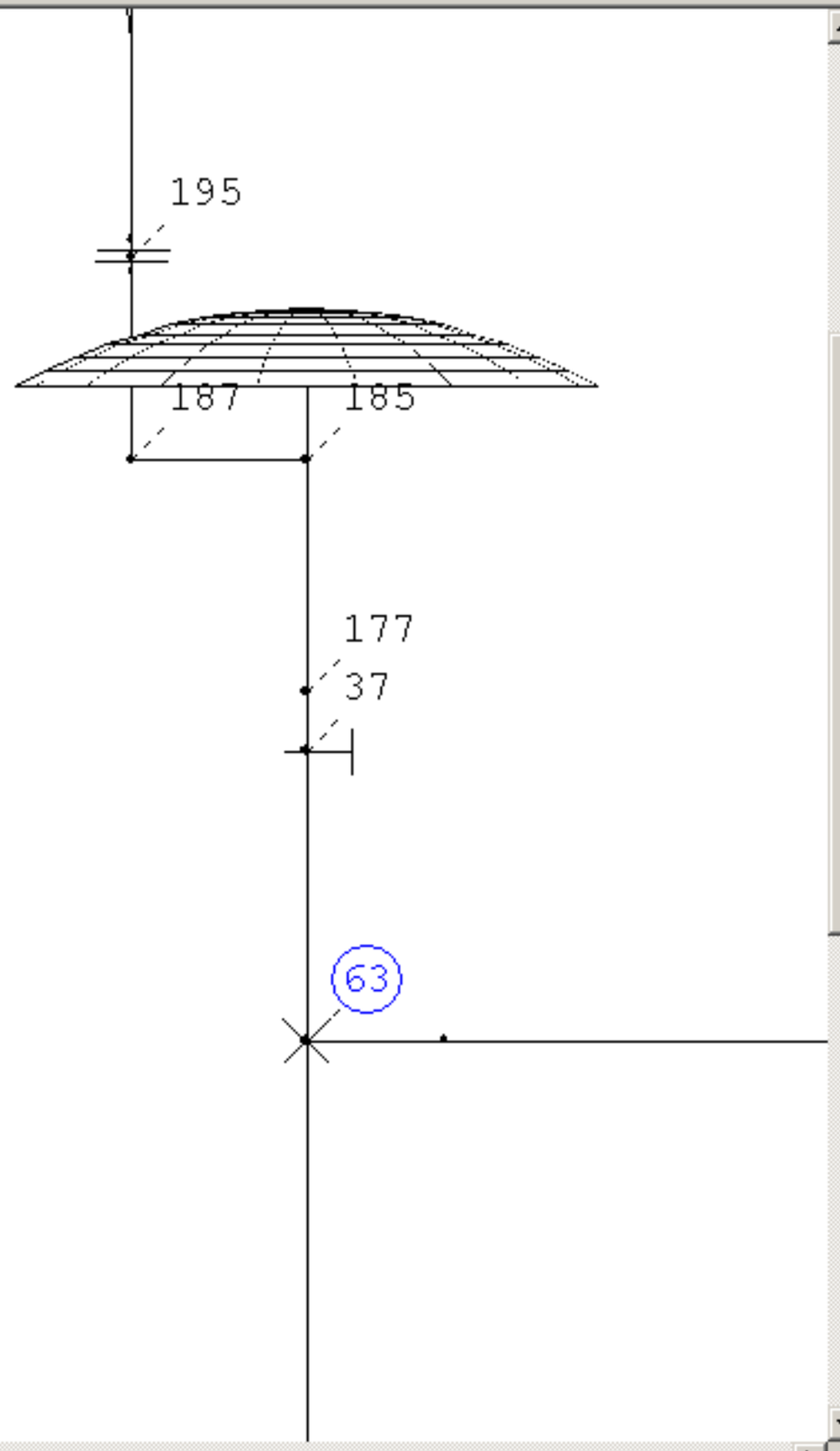

Calculation output | Output of storing, loading ...

Ready!

Za
Ya Xa

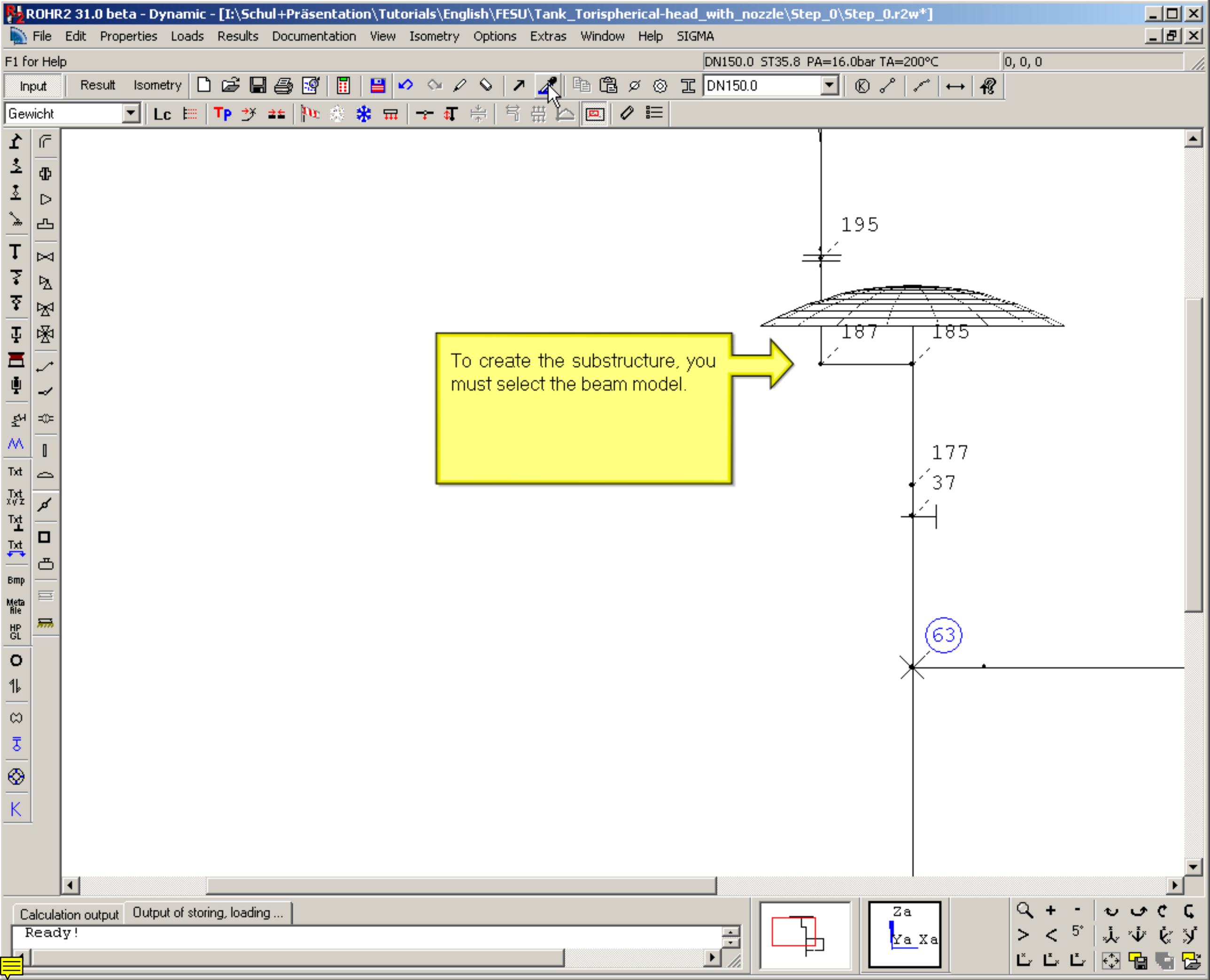
ROHR2 31.0 beta - Dynamic - [I:\Schul+Präsentation\Tutorials\English\FESU\Tank_Torispherical-head_with_nozzle\Step_0\Step_0.r2w*]
File Edit Properties Loads Results Documentation View Isometry Options Extras Window Help SIGMA
F1 for Help
DN150.0 ST35.8 PA=16.0bar TA=200°C
0, 0, 0
Input Result Isometry
DN150.0
Gewicht
195
187
185
177
37
63
To create the substructure, you must select the beam model.
Calculation output
Output of storing, loading ...
Ready!

ROHR2 31.0 beta - Dynamic - [I:\Schul+Präsentation\Tutorials\English\FESU\Tank_Torispherical-head_with_nozzle\Step_0\Step_0.r2w*]

File Edit Properties Loads Results Documentation View Isometry Options Extras Window Help SIGMA

Select segments from start node to end node

DN150.0 ST35.8 PA=16.0bar TA=200°C

0, 0, 0

Input Result Isometry

Gewicht Lc Tp

Individual elements
Start to end node
Lines
Pipelines
Window
All

Sections for superposition
Sections for fluid hammer plot

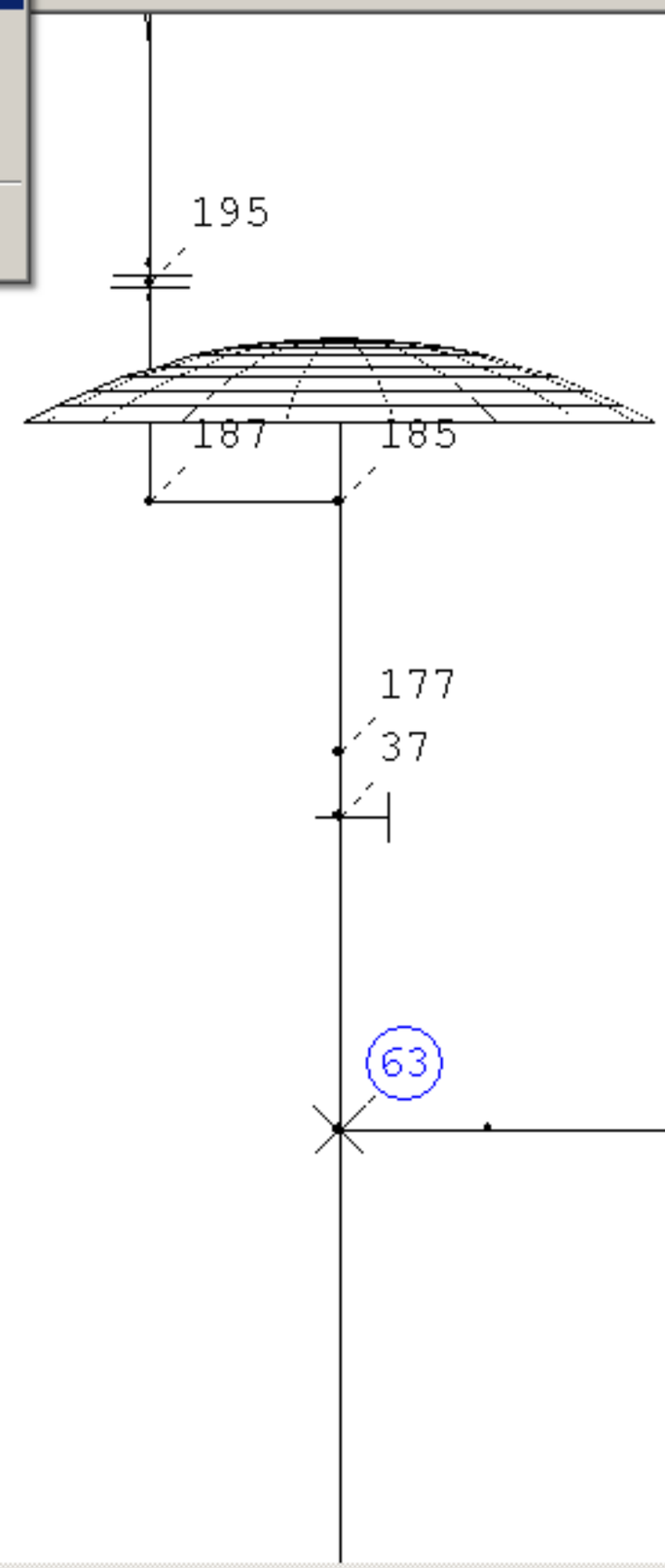

Txt Txt XYZ Txt Txt Bmp Meta file HP GL

Calculation output | Output of storing, loading ...

Ready!

Za Ya Xa

5°

ROHR2 31.0 beta - Dynamic - [I:\Schul+Präsentation\Tutorials\English\FESU\Tank_Torispherical-head_with_nozzle\Step_0\Step_0.r2w*]

File Edit Properties Loads Results Documentation View Isometry Options Extras Window Help SIGMA

Please click the left mouse button on the desired start point!

DN150.0 ST35.8 PA=16.0bar TA=200°C

0, 0, 0

Input Result Isometry

DN150.0

Gewicht

Lc

Tp

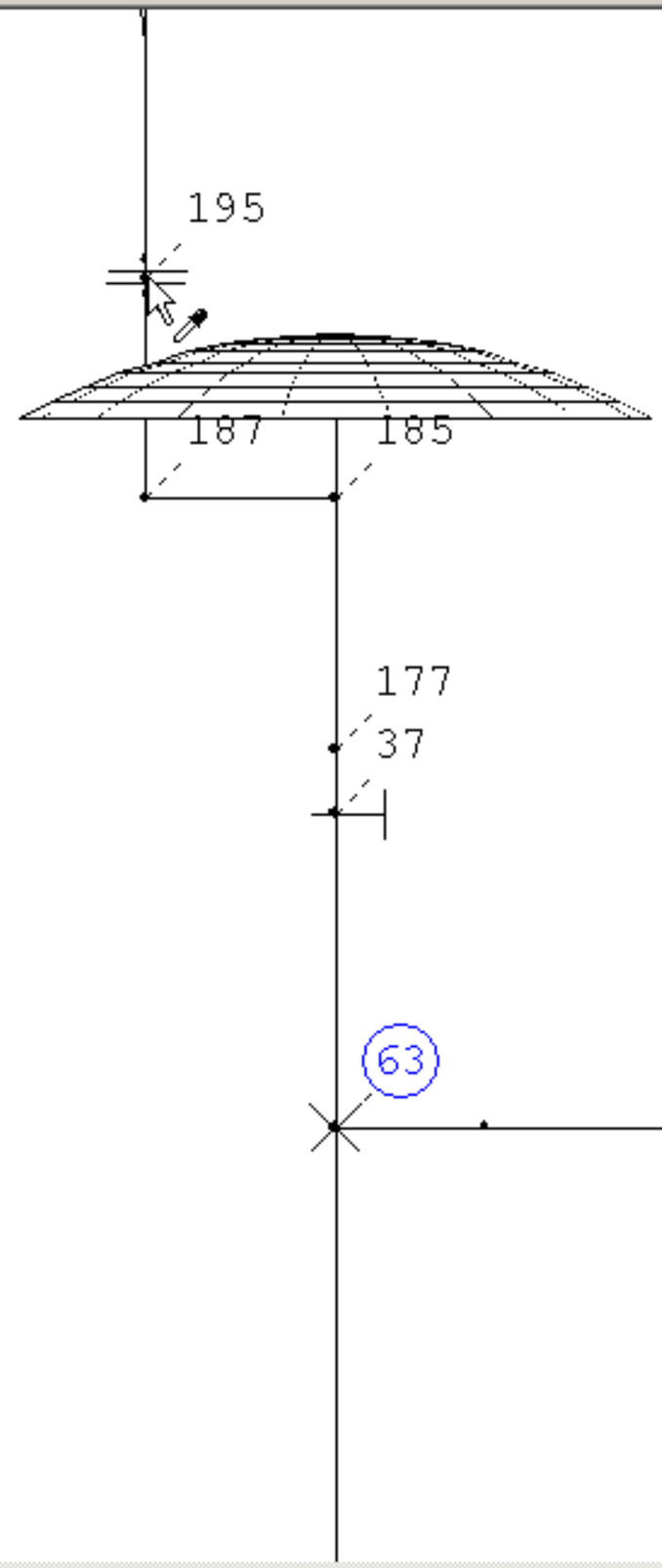

Calculation output

Output of storing, loading ...

Ready!

Za

Ya Xa

ROHR2 31.0 beta - Dynamic - [I:\Schul+Präsentation\Tutorials\English\FESU\Tank_Torispherical-head_with_nozzle\Step_0\Step_0.r2w*]

File Edit Properties Loads Results Documentation View Isometry Options Extras Window Help SIGMA

Please click the left mouse button on the desired end point!

DN150.0 ST35.8 PA=16.0bar TA=200°C

0, 0, 0

Input Result Isometry

DN150.0

Gewicht

Lc

Tp

Txt Txt XYZ Txt Txt Bmp Meta file HP GL

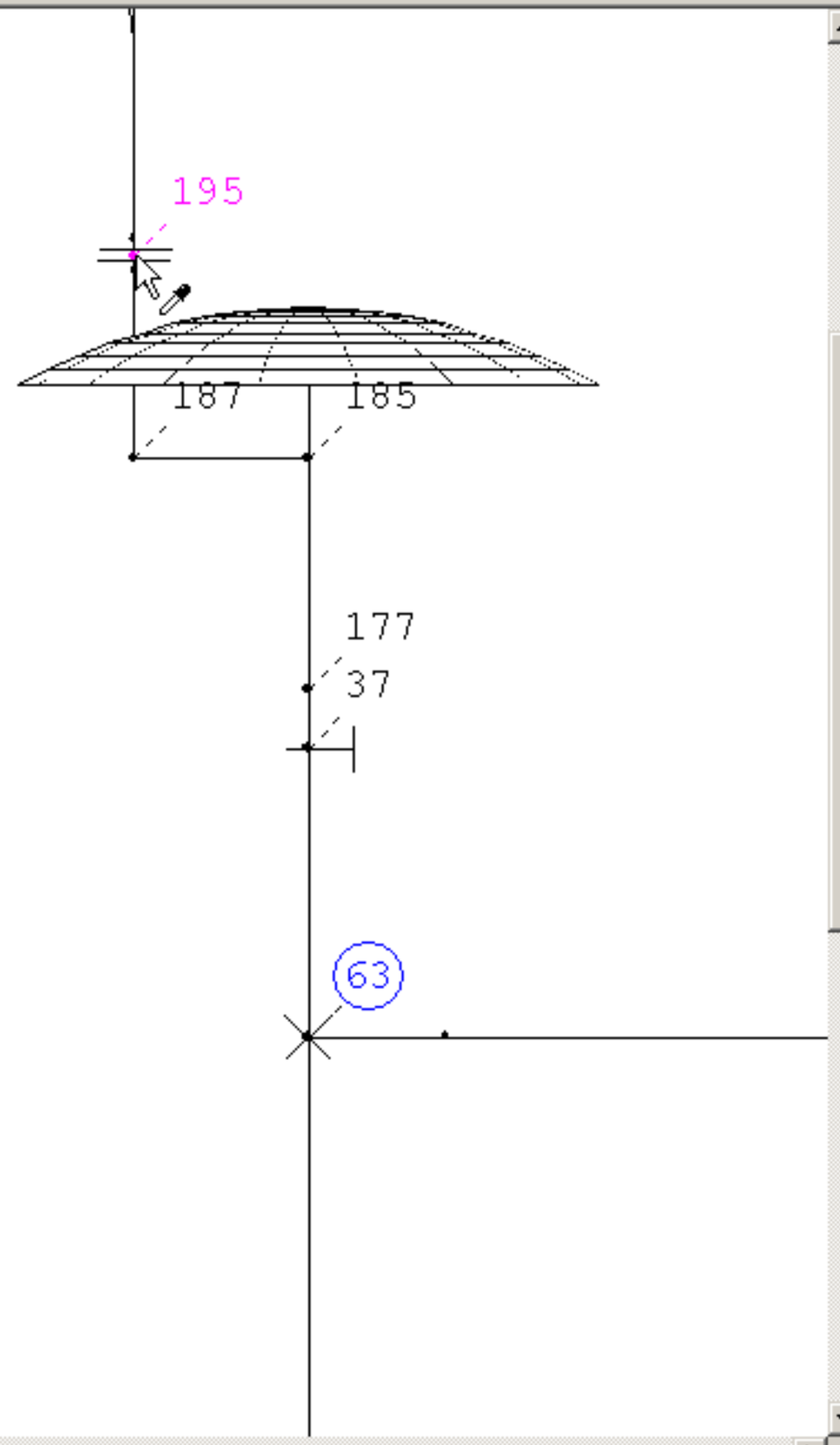

Calculation output | Output of storing, loading ...

Ready!

Za
Ya Xa

5°

ROHR2 31.0 beta - Dynamic - [I:\Schul+Präsentation\Tutorials\English\FESU\Tank_Torispherical-head_with_nozzle\Step_0\Step_0.r2w*]

File Edit Properties Loads Results Documentation View Isometry Options Extras Window Help SIGMA

Please click the left mouse button on the desired end point!

DN150.0 ST35.8 PA=16.0bar TA=200°C

0, 0, 0

Input Result Isometry

DN150.0

Gewicht

Lc

Tp

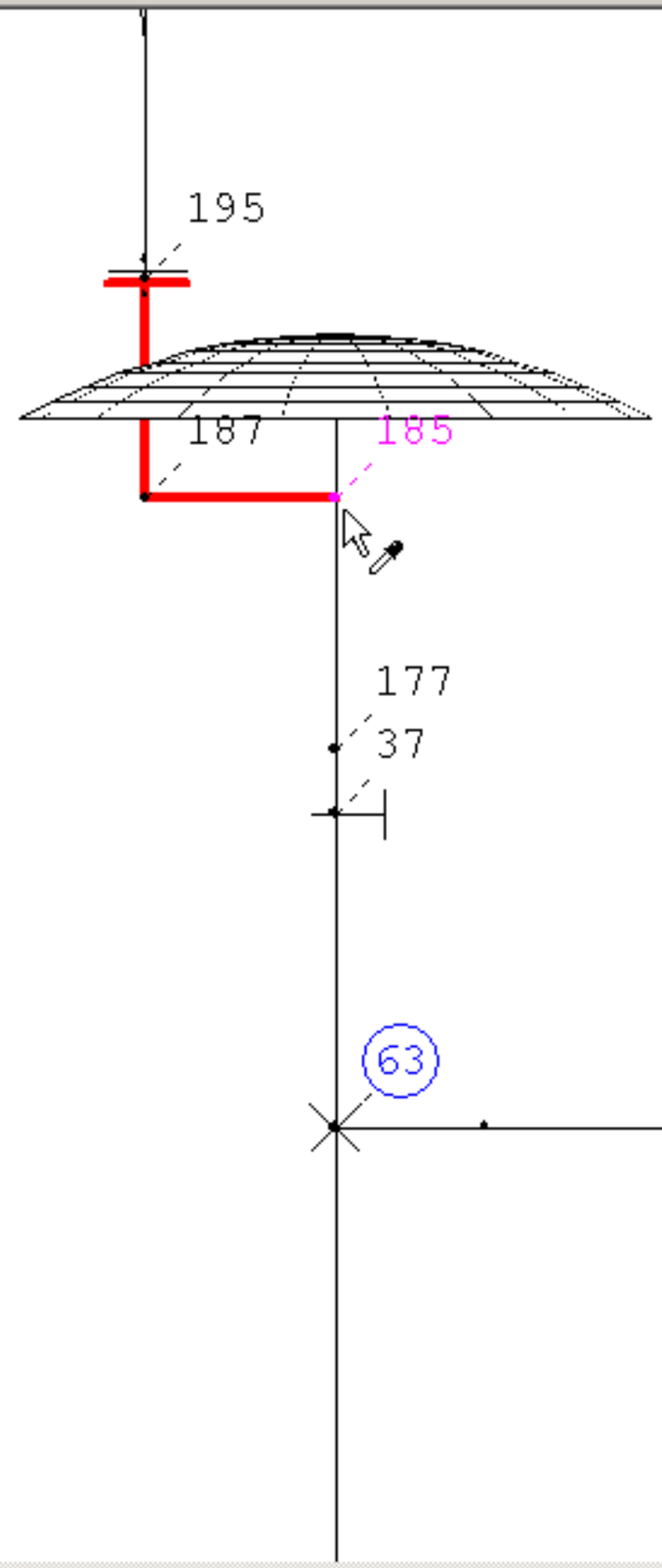

Calculation output

Output of storing, loading ...

Ready!

Za
Ya Xa

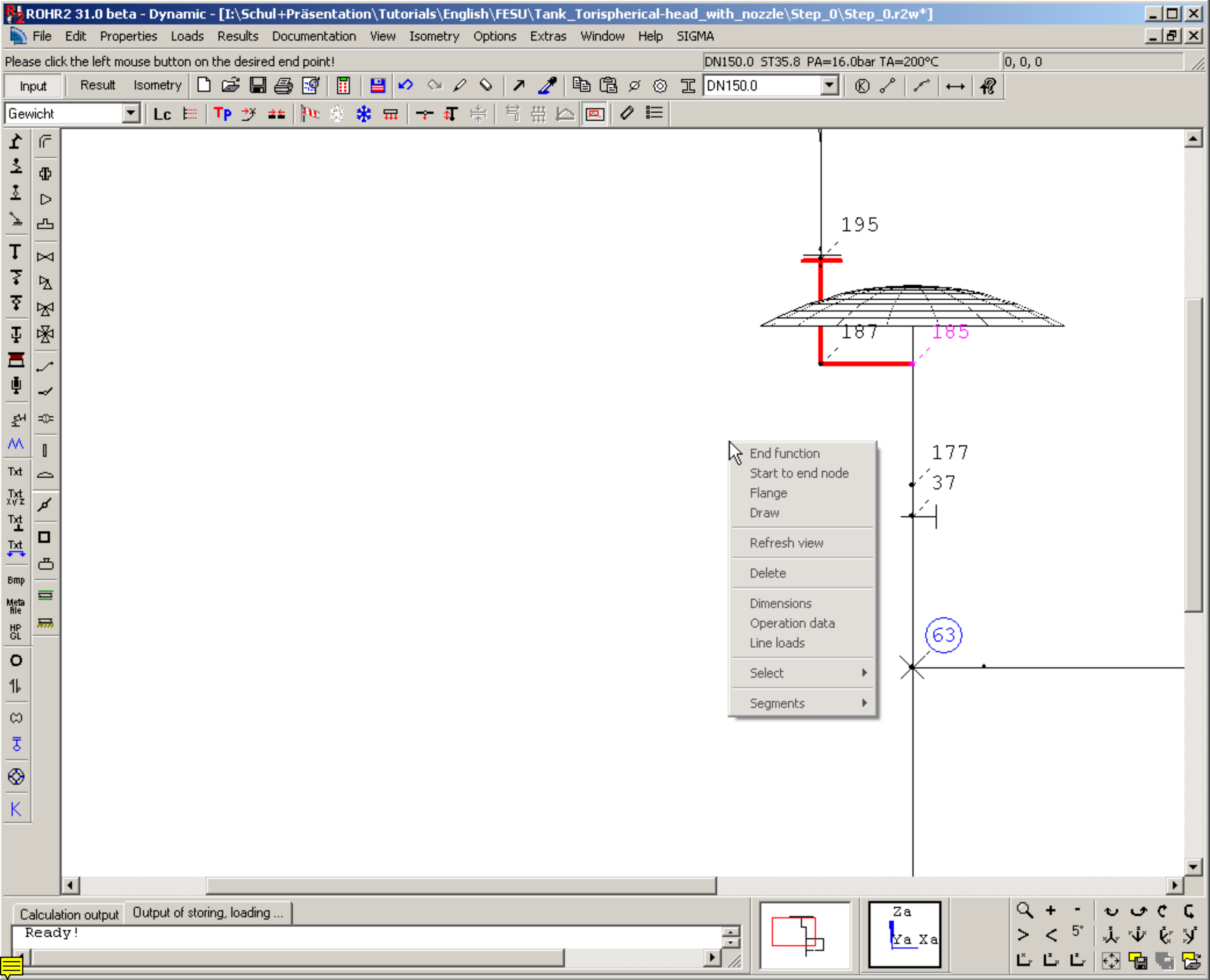
ROHR2 31.0 beta - Dynamic - [I:\Schul+Präsentation\Tutorials\English\FESU\Tank_Torispherical-head_with_nozzle\Step_0\Step_0.r2w*]
File Edit Properties Loads Results Documentation View Isometry Options Extras Window Help SIGMA
Please click the left mouse button on the desired end point!
DN150.0 ST35.8 PA=16.0bar TA=200°C
0, 0, 0
Input Result Isometry
DN150.0
Gewicht
195
187
185
177
37
63
End function
Start to end node
Flange
Draw
Refresh view
Delete
Dimensions
Operation data
Line loads
Select
Segments
Calculation output
Output of storing, loading ...
Ready!

ROHR2 31.0 beta - Dynamic - [I:\Schul+Präsentation\Tutorials\English\FESU\Tank_Torispherical-head_with_nozzle\Step_0\Step_0.r2w*]

File Edit Properties Loads Results Documentation View Isometry Options Extras Window Help SIGMA

Select segments from start node to end node

DN150.0 ST35.8 PA=16.0bar TA=200°C

0, 0, 0

Input Result Isometry

DN150.0

Gewicht

Lc

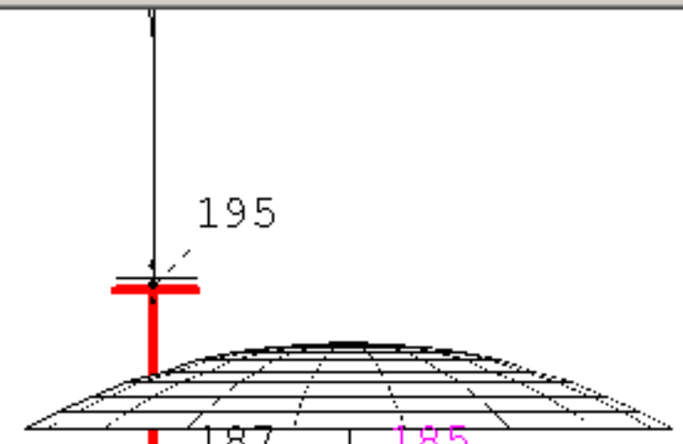

End function
Start to end node
Flange
Draw

Refresh view

Delete

Dimensions
Operation data
Line loads

Select

Segments

Individual elements
Start to end node
Lines
Pipelines
Window
All

Sections for superposition
Sections for plot fluid hammer

Calculation output | Output of storing, loading ...

Ready!

Za
Ya Xa

ROHR2 31.0 beta - Dynamic - [I:\Schul+Präsentation\Tutorials\English\FESU\Tank_Torispherical-head_with_nozzle\Step_0\Step_0.r2w*]

File Edit Properties Loads Results Documentation View Isometry Options Extras Window Help SIGMA

Please click the left mouse button on the desired end point!

DN150.0 ST35.8 PA=16.0bar TA=200°C

0, 0, 0

Input Result Isometry

DN150.0

Gewicht

Lc

Tp

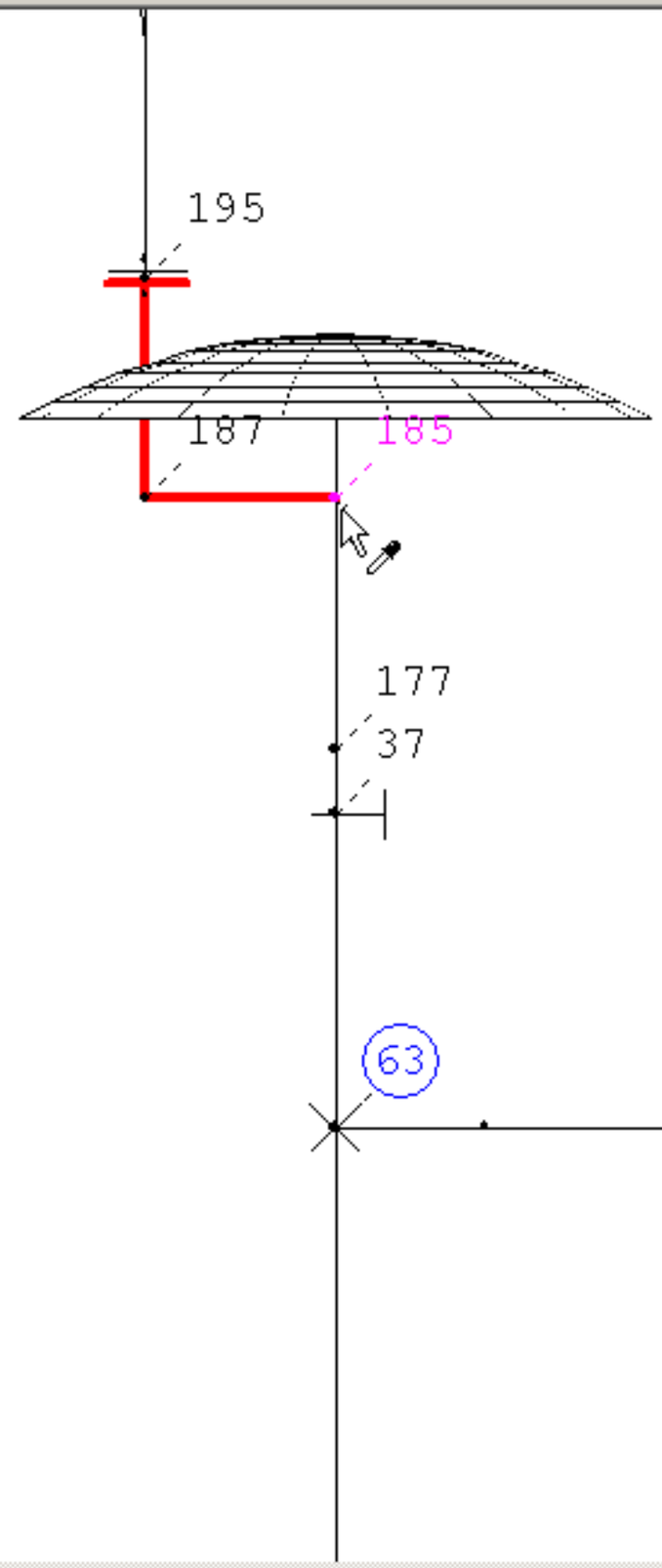

Calculation output

Output of storing, loading ...

Ready!

Za

Ya Xa

5°

ROHR2 31.0 beta - Dynamic - [I:\Schul+Präsentation\Tutorials\English\FESU\Tank_Torispherical-head_with_nozzle\Step_0\Step_0.r2w*]

File Edit Properties Loads Results Documentation View Isometry Options Extras Window Help SIGMA

Please click the left mouse button on the desired end point!

DN150.0 ST35.8 PA=16.0bar TA=200°C

0, 0, 0

Input Result Isometry

DN150.0

Gewicht

Lc

Tp

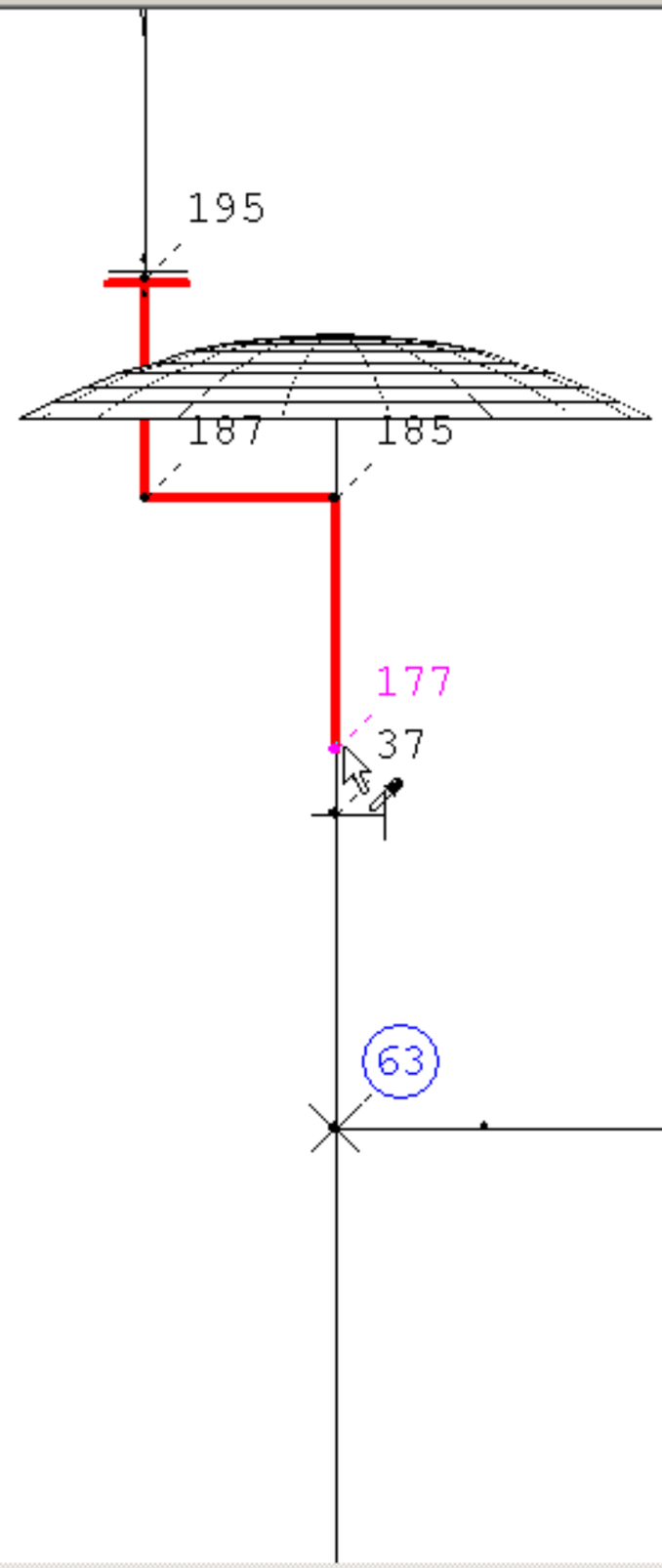

Txt Txt XYZ Txt Txt Bmp Meta file HP GL

Calculation output

Output of storing, loading ...

Ready!

Za Ya Xa

5°

After you have selected the beam model, click on menu bar 'Edit....

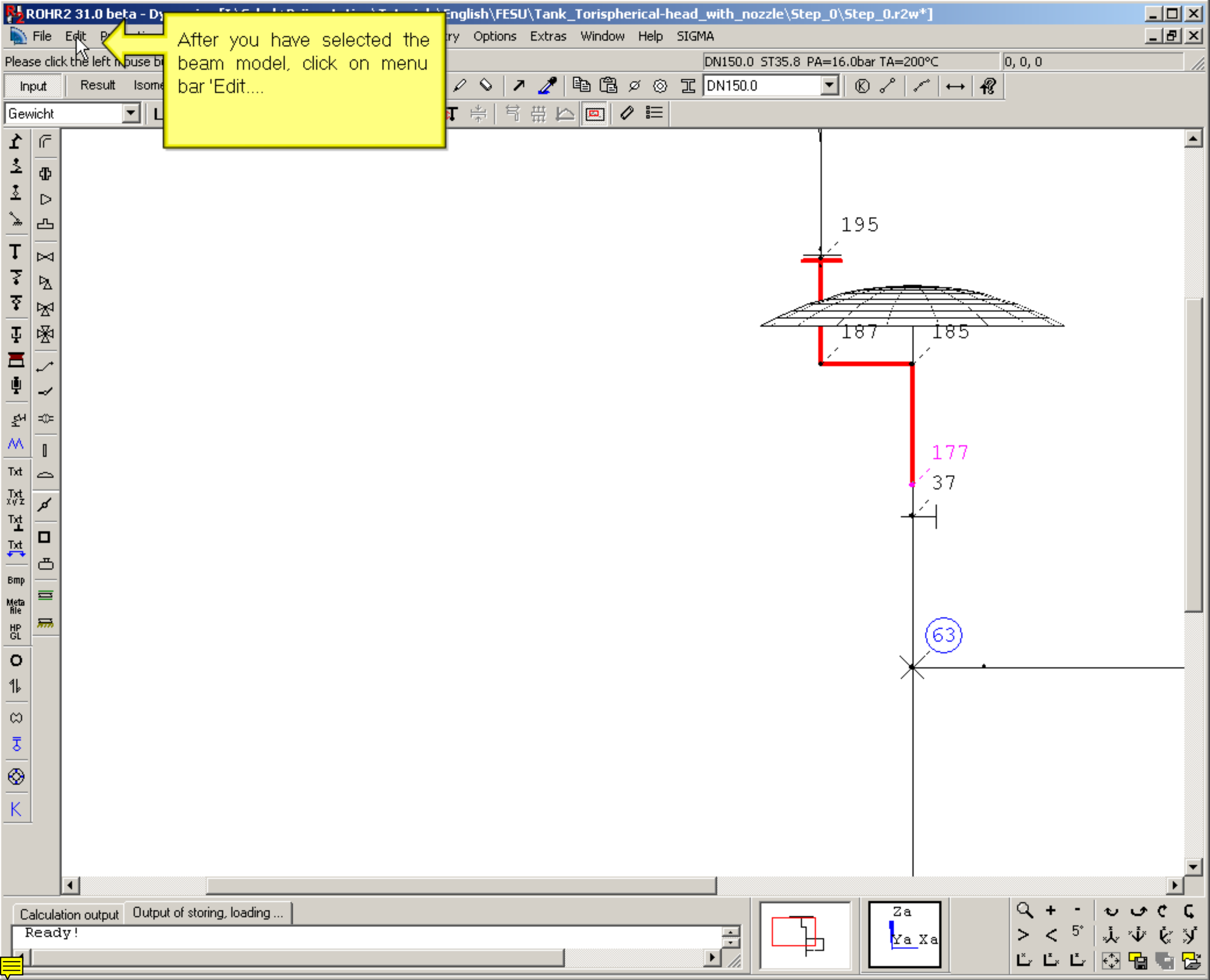

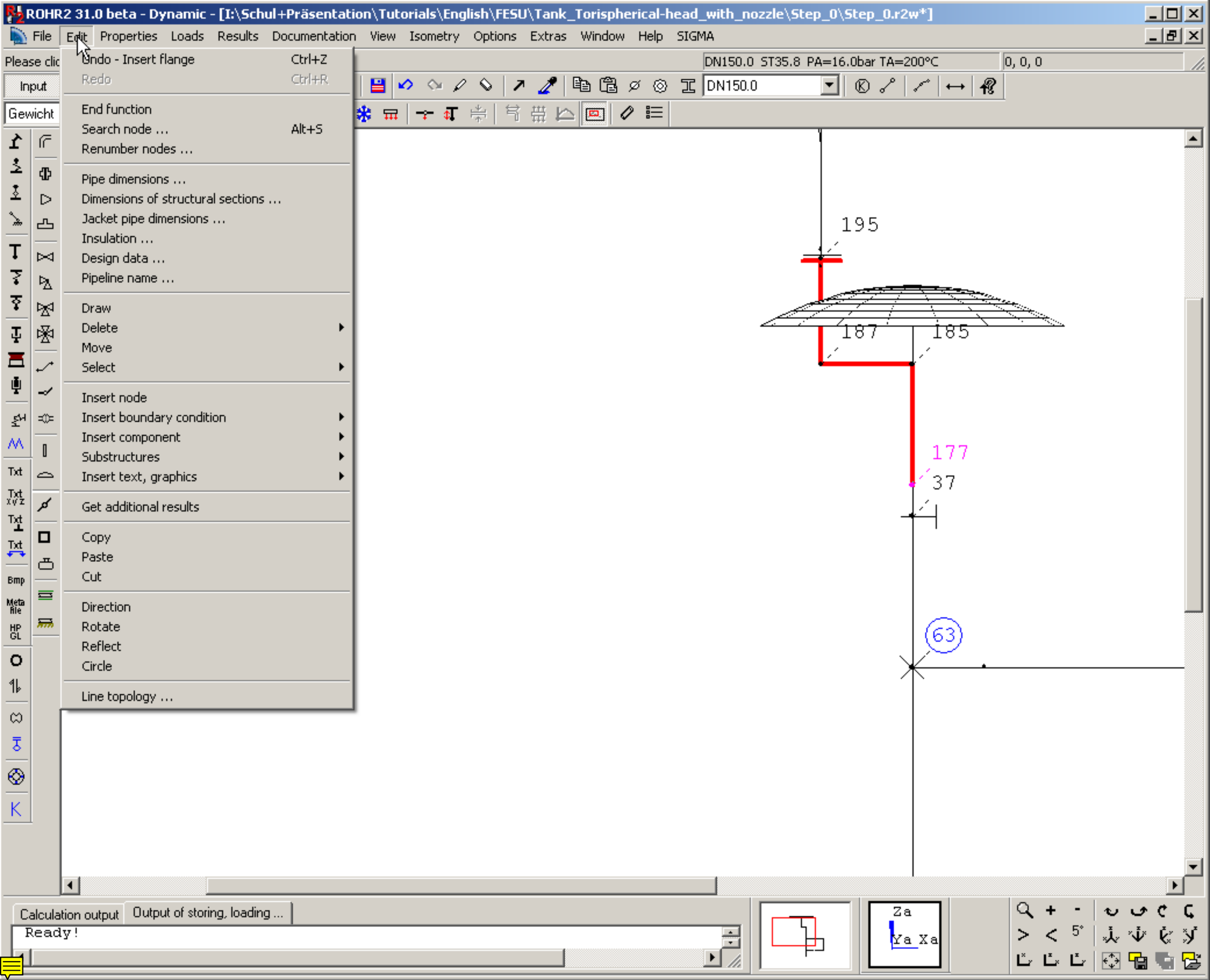
ROHR2 31.0 beta - Dynamic - [I:\Schul+Präsentation\Tutorials\English\FESU\Tank_Torispherical-head_with_nozzle\Step_0\Step_0.r2w*]
File
Edit
Properties
Loads
Results
Documentation
View
Isometry
Options
Extras
Window
Help
SIGMA
Undo - Insert flange Ctrl+Z
Redo Ctrl+R
End function
Search node ... Alt+S
Renumber nodes ...
Pipe dimensions ...
Dimensions of structural sections ...
Jacket pipe dimensions ...
Insulation ...
Design data ...
Pipeline name ...
Draw
Delete
Move
Select
Insert node
Insert boundary condition
Insert component
Substructures
Insert text, graphics
Get additional results
Copy
Paste
Cut
Direction
Rotate
Reflect
Circle
Line topology ...
DN150.0 ST35.8 PA=16.0bar TA=200°C
0, 0, 0
DN150.0
195
187
185
177
37
63
Calculation output
Output of storing, loading ...
Ready!

ROHR2 31.0 beta - Dynamic - [I:\Schul+Präsentation\Tutorials\English\FESU\Tank_Torispherical-head_with_nozzle\Step_0\Step_0.r2w*]

File | Edit | Properties | Loads | Results | Documentation | View | Isometry | Options | Extras | Window | Help | SIGMA

DN150.0 ST35.8 PA=16.0bar TA=200°C

0, 0, 0

DN150.0

Create su

Input

Gewicht

Undo - Insert flange Ctrl+Z
Redo Ctrl+R

End function
Search node ... Alt+S
Renumber nodes ...

Pipe dimensions ...
Dimensions of structural sections ...
Jacket pipe dimensions ...
Insulation ...
Design data ...
Pipeline name ...

Draw
Delete
Move
Select

Insert node
Insert boundary condition
Insert component
Substructures
Insert text, graphics

Get additional results

Copy
Paste
Cut

Direction
Rotate
Reflect
Circle

Line topology ...

Create
Insert

... 'Substructures'....
.. 'Create'

195
187
185
177
37
63

Calculation output | Output of storing, loading ...

Ready!

Za
Ya Xa

ROHR2 31.0 beta - Dynamic - [I:\Schul+Präsentation\Tutorials\English\FESU\Tank_Torispherical-head_with_nozzle\Step_0\Step_0.r2w*]

File Edit Properties Loads Results Documentation View Isometry Options Extras Window Help SIGMA

Please click the left mouse button on the desired end point!

DN150.0 ST35.8 PA=16.0bar TA=200°C

0, 0, 0

Input Result Isometry

DN150.0

Gewicht

Lc

Tp

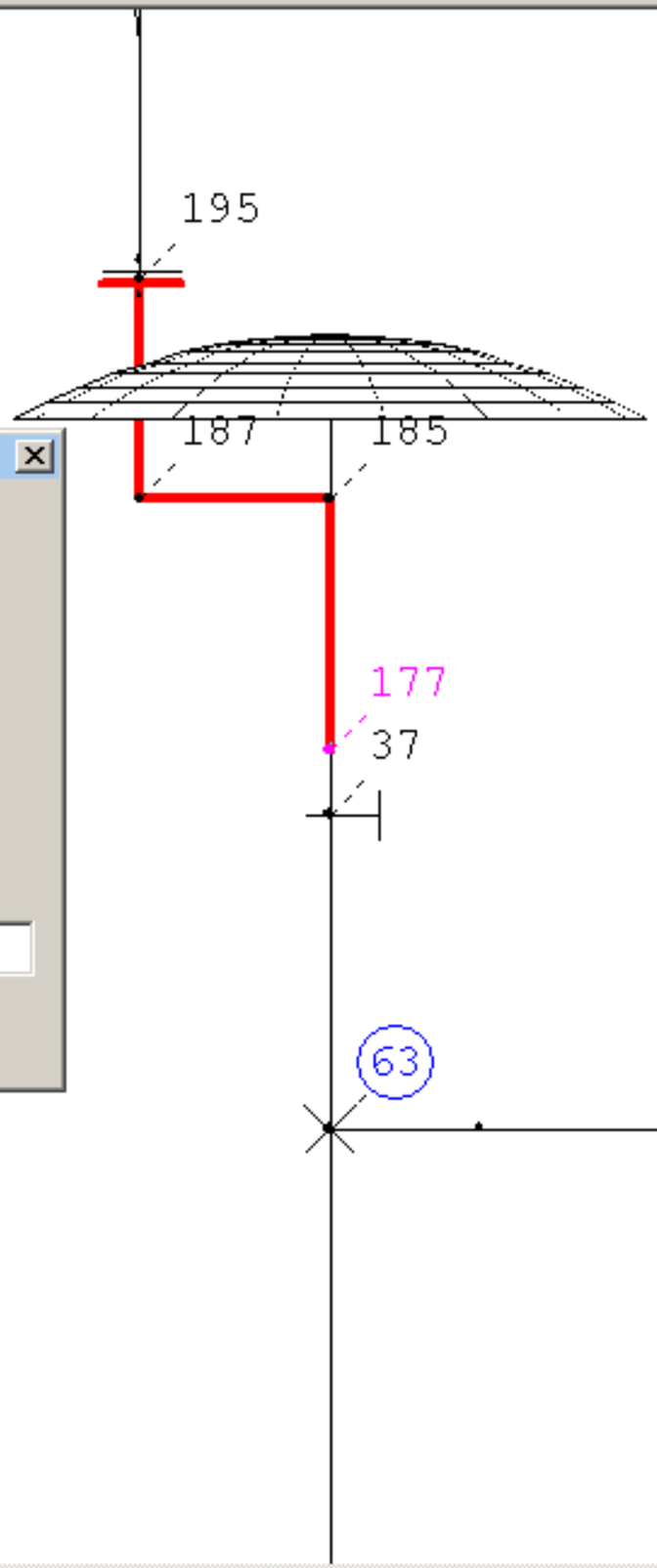

Create FE substructure

Name of the structure: SUB_2

Connection nodes:

1	195
2	177

Coordinate system

Define coordinate system

Edit coordinate system

Description:

OK Cancel

Calculation output | Output of storing, loading ...

Ready!

Za Ya Xa

ROHR2 31.0 beta - Dynamic - [I:\Schul+Präsentation\Tutorials\English\FESU\Tank_Torispherical-head_with_nozzle\Step_0\Step_0.r2w*]

File Edit Properties Loads Results Documentation View Isometry Options Extras Window Help SIGMA

Please click the left mouse button on the desired end point!

DN150.0 ST35.8 PA=16.0bar TA=200°C

0, 0, 0

Input Result Isometry

DN150.0

Gewicht

Lc

Tp

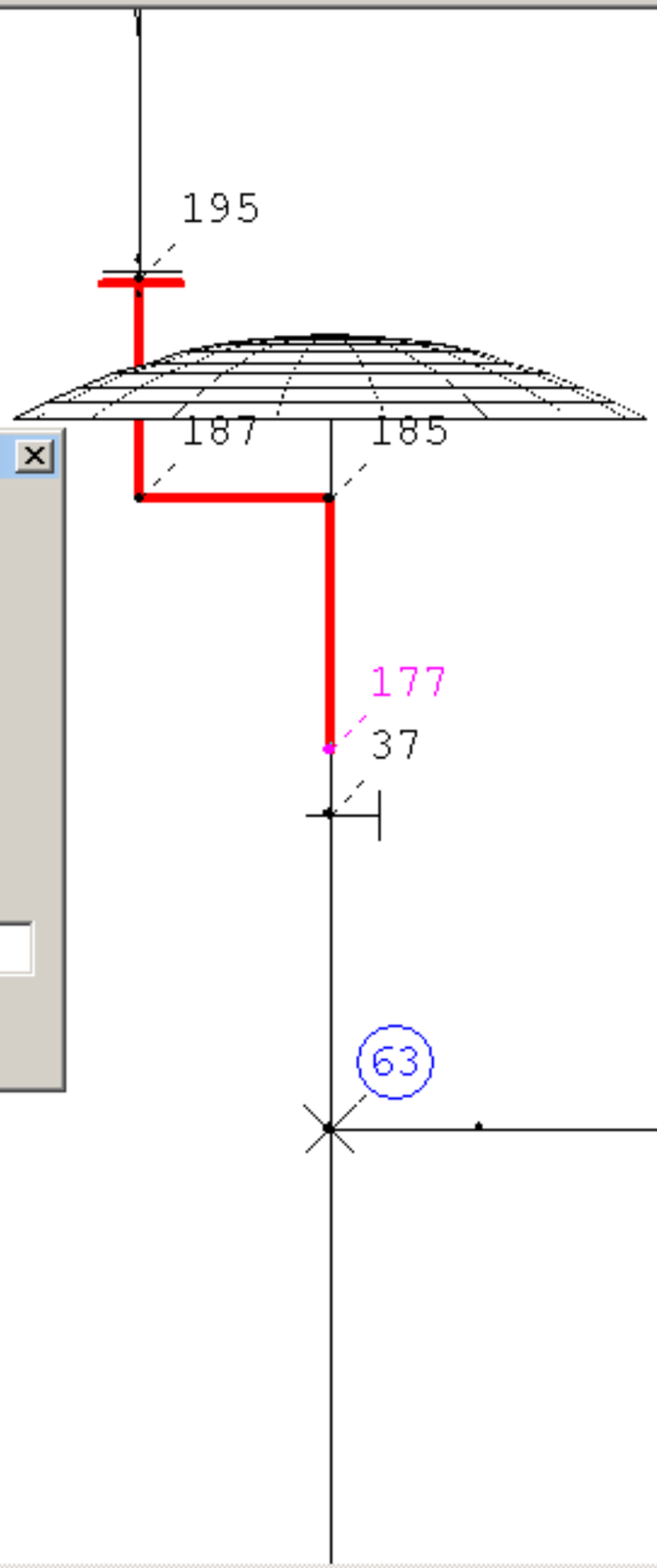

Create FE substructure

Name of the structure: SUB_2

Connection nodes:

1	195
2	177

Coordinate system

Define coordinate system

Edit coordinate system

Description:

OK Cancel

Calculation output | Output of storing, loading ...

Ready!

Za Ya Xa

ROHR2 31.0 beta - FESU - [I:\Schul+Präsentation\Tutorials\English\FESU\Tank_Torispherical-head_with_nozzle\Step_0\sub_001.r2fesu*]

File Edit Properties Results Documentation View Options Window Help

F1 for Help | PA=0.0bar TA=0°C | 0, 0, 0

Input Model Result

Txt Txt Txt Bmp Meta file HP GL

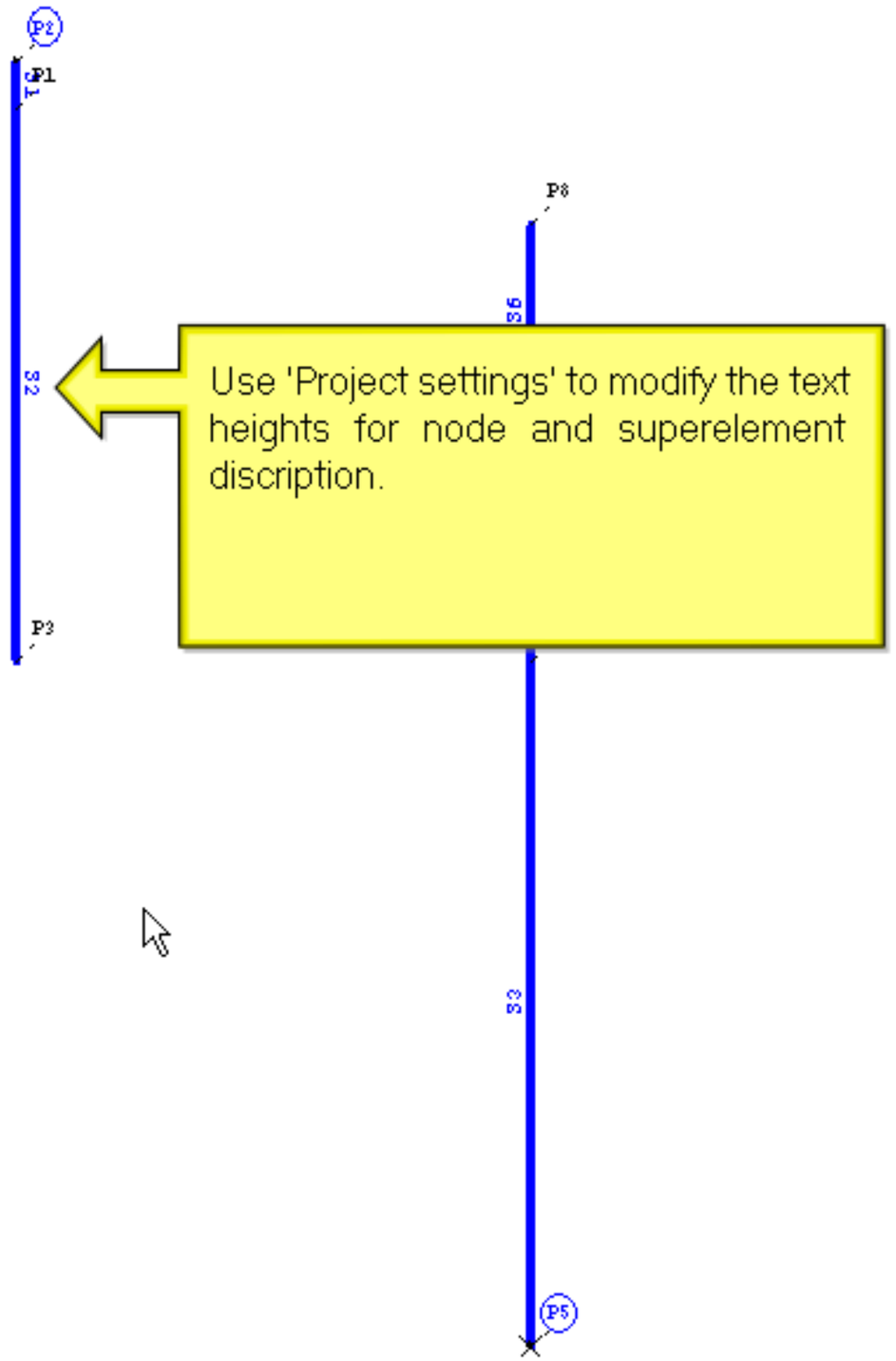

Calculation output | Output of storing, loading ...

Za Ya Xa

ROHR2 31.0 beta - FESU - [I:\Schul+Präsentation\Tutorials\English\FESU\Tank_Torispherical-head_with_nozzle\Step_0\sub_001.r2fesu*]

File Edit Properties Results Documentation View Options Window Help

General settings
Project settings
Settings property window

PA=0.0bar TA=0°C

0, 0, 0

Input Model Result

Txt
Txt
Txt
Bmp
Meta file
HP GL

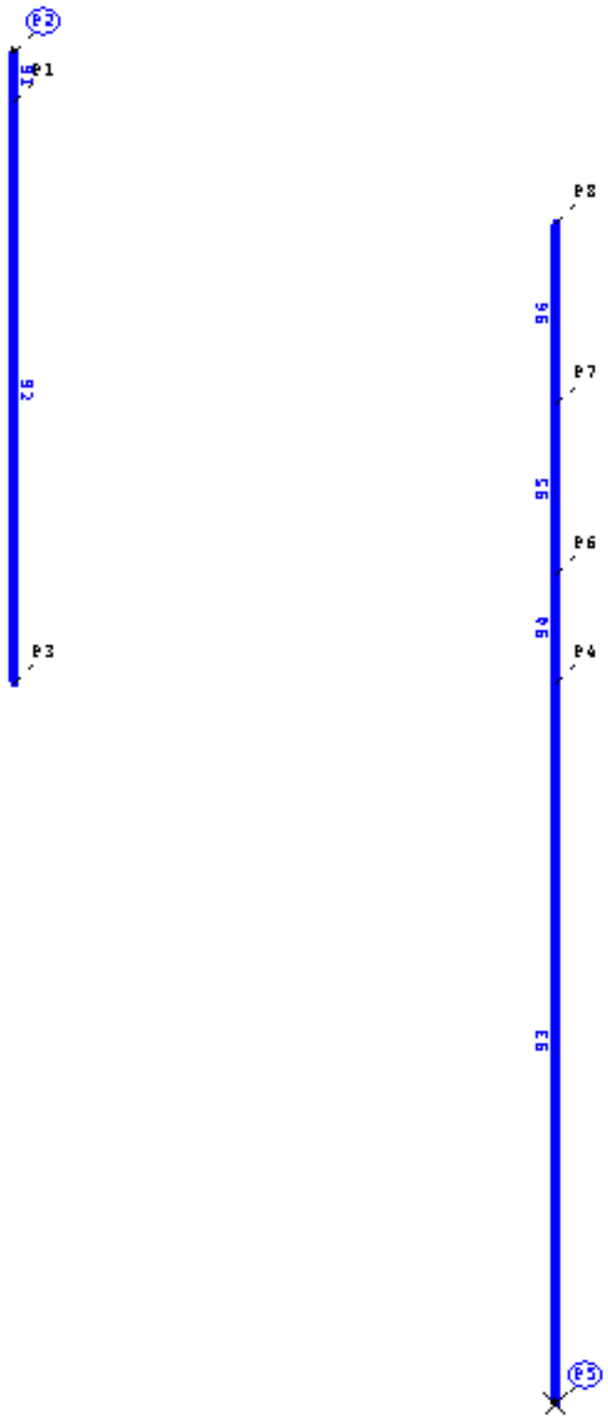

Calculation output
Output of storing, loading ...

Za
Ya Xa

5°

ROHR2 31.0 beta - FESU - [I:\Schul+Präsentation\Tutorials\English\FESU\Tank_Torispherical-head_with_nozzle\Step_0\sub_001.r2fesu*]

File Edit Properties Results Documentation View Options Window Help

General settings
Project settings
Settings property window

Change settings for the current project

PA=0.0bar TA=0°C

0, 0, 0

Input Model Result

Txt
Txt
Txt
Bmp
Meta file
HP GL

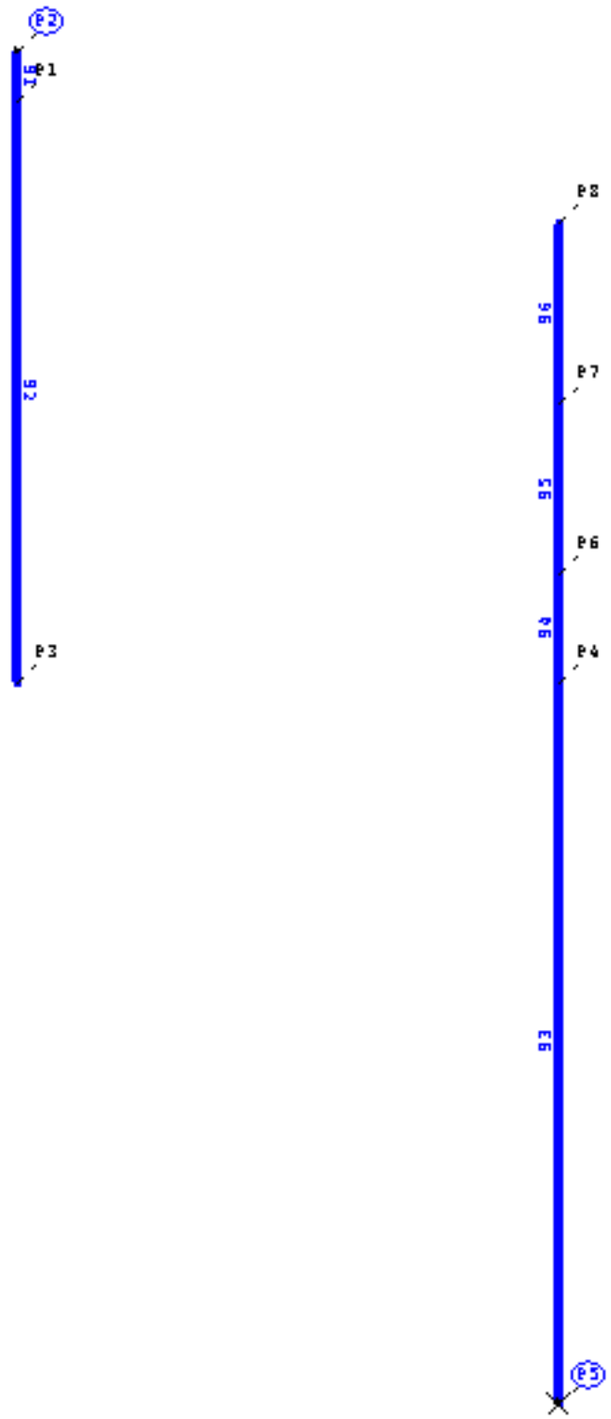

Calculation output
Output of storing, loading ...

Za
Ya Xa

5°

ROHR2 31.0 beta - FESU - [I:\Schul+Präsentation\Tutorials\English\FESU\Tank_Torispherical-head_with_nozzle\Step_0\sub_001.r2fesu*]

File Edit Properties Results Documentation View Options Window Help

F1 for Help | PA=0.0bar TA=0°C | 0, 0, 0

Input | Model | Result

Project settings

Txt
Txt
Txt
Bmp
Meta file
HP GL

Project settings

General | Graphics

Description of the FE model:

Temperature for the calculation of the stiffness matrix: 20 °C

OK | Abbrechen | Übernehmen | Hilfe

Calculation output | Output of storing, loading ...

ROHR2 31.0 beta - FESU - [I:\Schul+Präsentation\Tutorials\English\FESU\Tank_Torispherical-head_with_nozzle\Step_0\sub_001.r2fesu*]

File Edit Properties Results Documentation View Options Window Help

F1 for Help | PA=0.0bar TA=0°C | 0, 0, 0

Input | Model | Result

Txt
Txt
Txt
Bmp
Meta file
HP GL

Project settings

General | Graphics

Description of the FE model:

Temperature for the calculation of the stiffness matrix: 20 °C

OK | Abbrechen | Übernehmen | Hilfe

Calculation output | Output of storing, loading ...

ROHR2 31.0 beta - FESU - [I:\Schul+Präsentation\Tutorials\English\FESU\Tank_Torispherical-head_with_nozzle\Step_0\sub_001.r2fesu*]

File Edit Properties Results Documentation View Options Window Help

F1 for Help | PA=0.0bar TA=0°C | 0, 0, 0

Input Model Result

Txt Txt Txt Bmp Meta file HP GL

Project settings

General Graphics

Sheet size
A0 A2 A4 A1 A3

Scale : 1 : 9

Capture range: 10 mm

Show grid

Text height

Point names 3 mm Superelement names 6 mm

Scale factors for symbols

Supports 1 Other boundary conditions 1

Display

- [x] Point names
- [x] Superelement names
- [ ] Jacket names
- [ ] local coordinate system
- [x] Additional text

OK Abbrechen Übernehmen Hilfe

Calculation output | Output of storing, loading ...

Za Ya Xa

ROHR2 31.0 beta - FESU - [I:\Schul+Präsentation\Tutorials\English\FESU\Tank_Torispherical-head_with_nozzle\Step_0\sub_001.r2fesu*]

File Edit Properties Results Documentation View Options Window Help

F1 for Help | PA=0.0bar TA=0°C | 0, 0, 0

Input Model Result

Txt Txt Txt Bmp Meta file HP GL

Project settings

General | Graphics

Sheet size
A0 A2 A4 A1 A3
Scale : 1 : 9

Capture range: 10 mm
Show grid

Text height
Point names 3 mm
Superelement names 6 mm

Scale factors for symbols
Supports 1
Other boundary conditions 1

Display
- Point names
- Superelement names
- Jacket names
- local coordinate system
- Additional text

OK Abbrechen Übernehmen Hilfe

Calculation output | Output of storing, loading ...

Za
Ya Xa

ROHR2 31.0 beta - FESU - [I:\Schul+Präsentation\Tutorials\English\FESU\Tank_Torispherical-head_with_nozzle\Step_0\sub_001.r2fesu*]

File Edit Properties Results Documentation View Options Window Help

F1 for Help | PA=0.0bar TA=0°C | 0, 0, 0

Input | Model | Result

Txt
Txt
Txt
Bmp
Meta file
HP GL

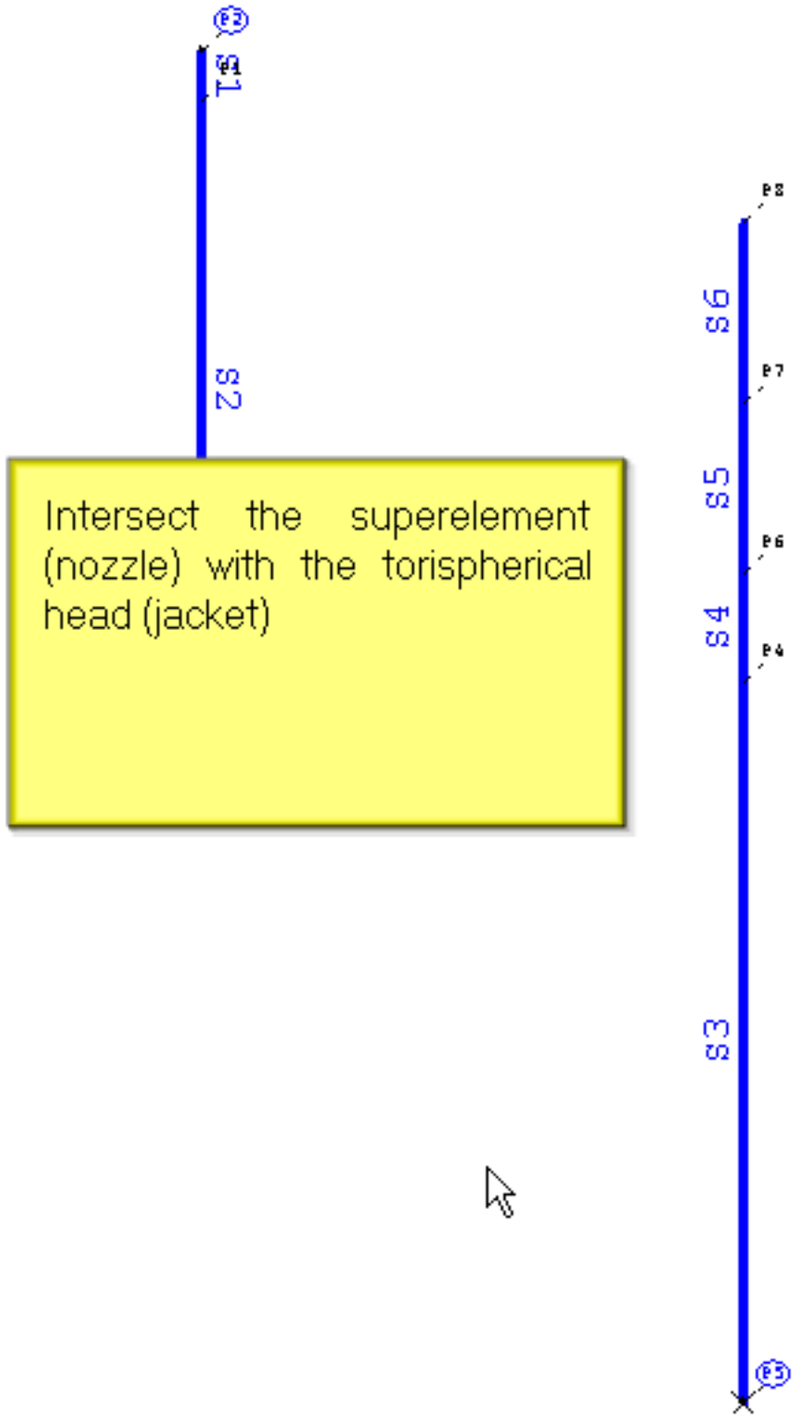

Calculation output | Output of storing, loading ...

Za
Ya Xa

ROHR2 31.0 beta - FESU - [I:\Schul+Präsentation\Tutorials\English\FESU\Tank_Torispherical-head_with_nozzle\Step_0\sub_001.r2fesu*]

File Edit Properties Results Documentation View Options Window Help

Insert a new intersection | PA=0.0bar TA=0°C | 0, 0, 0

Input Model Result

new Intersection

Click on 'new Intersection'

Txt Txt Txt Bmp Meta file HP GL

P2 P1 S1 S2 P3

P8 S6 P7 S5 P6 S4 P4 S3 P5

Calculation output | Output of storing, loading ...

Za Ya Xa

5°

ROHR2 31.0 beta - FESU - [I:\Schul+Präsentation\Tutorials\English\FESU\Tank_Torispherical-head_with_nozzle\Step_0\sub_001.r2fesu*]

File Edit Properties Results Documentation View Options Window Help

F1 for Help | PA=0.0bar TA=0°C | 0, 0, 0

Input Model Result

Intersection

Name: I1

Superelement | is intersected with jacket

Type of intersection: Nozzle / Trunion / Bore

Fillet on the surface (AROV): 0 mm

Factor for add. thickness at sharp-edged intersection: 0

Scaling factor for with ln (analysis region on the nozzle): 1

Scaling factor for with ls (analysis region on the jacket): 1

Distribution in the region of the intersection

Region	n0	n1	n2	n3	n4	n5	n6	n7
No. of elements	3	0	3	3	3	3	2	0

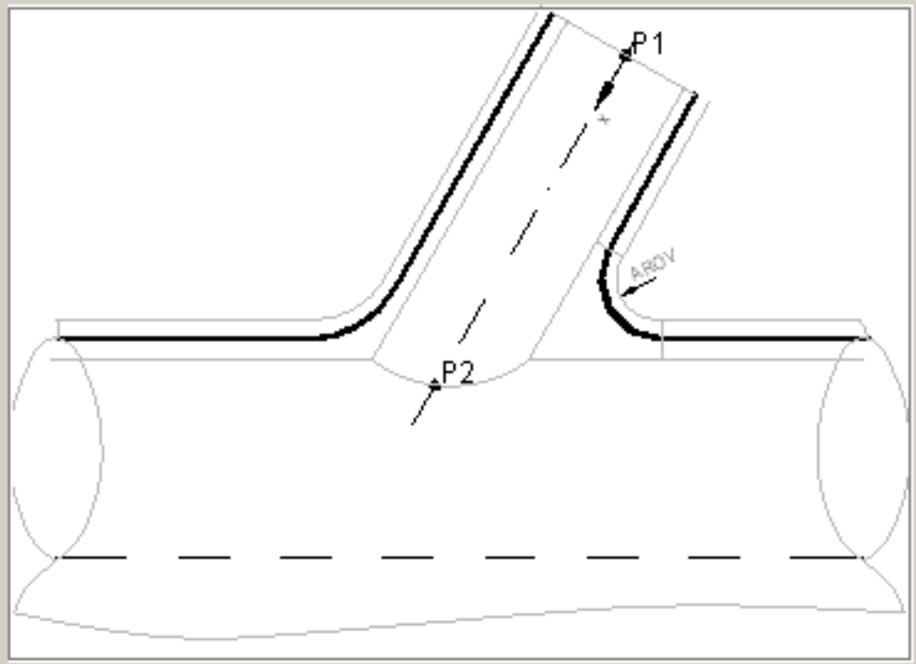

Type of internal projection

- No internal projection
- Parallel to intersection line
- Orthogonal to the nozzle

Length of the internal projection: 0 mm

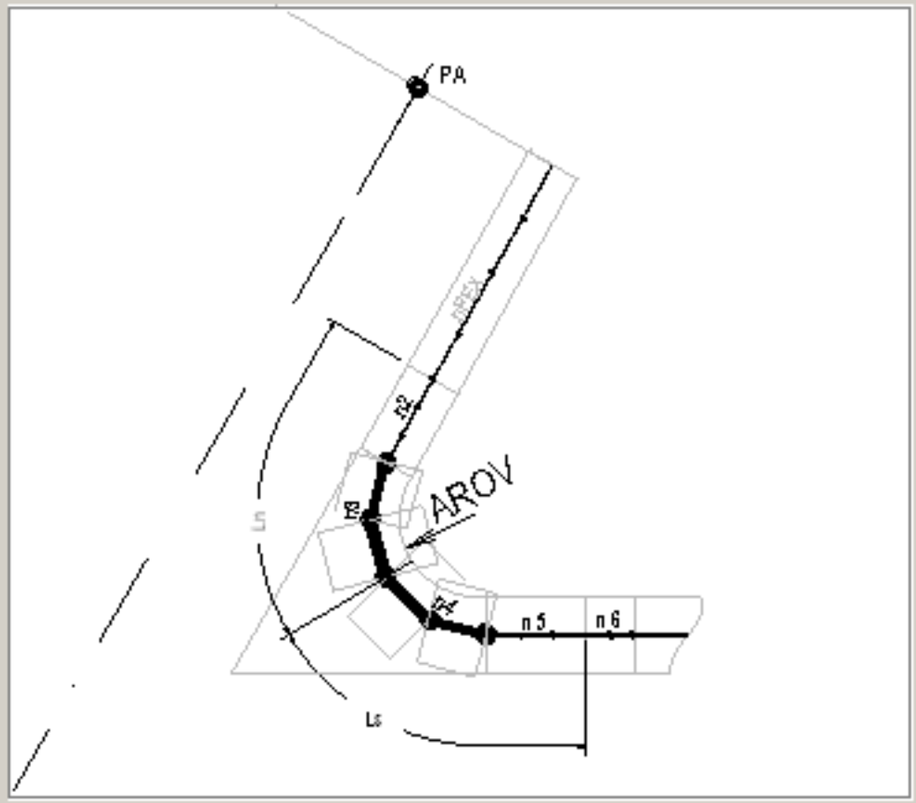

Reinforcing pad

with reinforcing pad | Type of model: single-shell / double-shell

Width of the reinforcing pad (AKrag): 0 mm

Thickness of the reinforcing pad: 0 mm

No. of elements on the reinforcing pad (nFEK): 3

Material

OK | Cancel | Default

Calculation output | Output of storing, loading ...

ROHR2 31.0 beta - FESU - [I:\Schul+Präsentation\Tutorials\English\FESU\Tank_Torispherical-head_with_nozzle\Step_0\sub_001.r2fesu*]

File Edit Properties Results Documentation View Options Window Help

F1 for Help | PA=0.0bar TA=0°C | 0, 0, 0

Input Model Result

Intersection

Name: I1

Superelement | is intersected with jacket

Type of intersection

(•) Nozzle ( ) Trunion ( ) Bore

Fillet on the surface (AROV): 0 mm

Factor for add. thickness at sharp-edged intersection: 0

Scaling factor for with ln (analysis region on the nozzle): 1

Scaling factor for with ls (analysis region on the jacket): 1

Distribution in the region of the intersection

Region	n0	n1	n2	n3	n4	n5	n6	n7
No. of elements	3	0	3	3	3	3	2	0

Type of internal projection

(•) No internal projection
( ) Parallel to intersection line
( ) Orthogonal to the nozzle

Length of the internal projection: 0 mm

Reinforcing pad

[ ] with reinforcing pad Type of model: ( ) single-shell (•) double-shell

Width of the reinforcing pad (AKrag): 0 mm

Thickness of the reinforcing pad: 0 mm

No. of elements on the reinforcing pad (nFEK): 3

Material:

OK Cancel Default

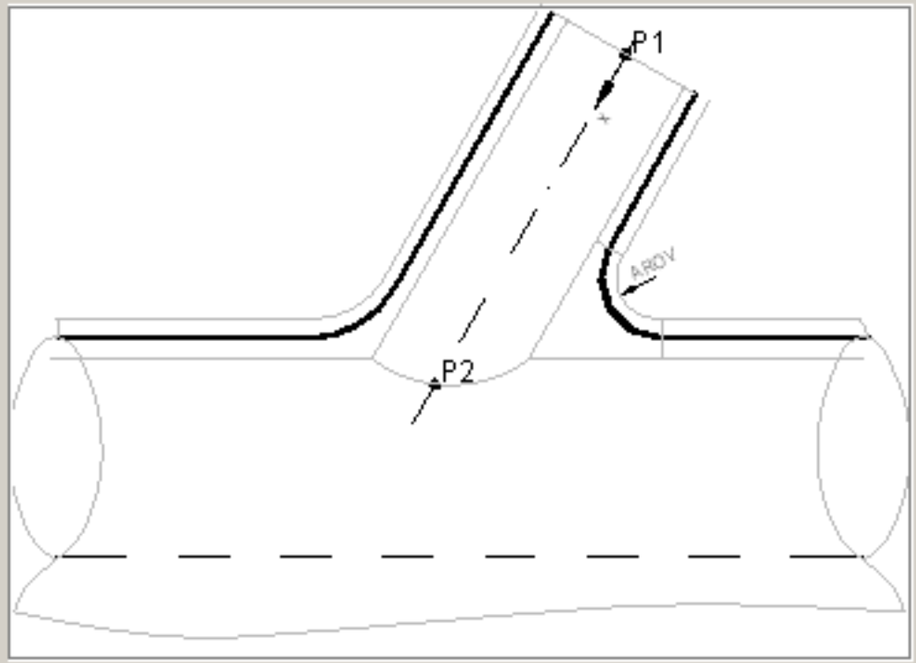

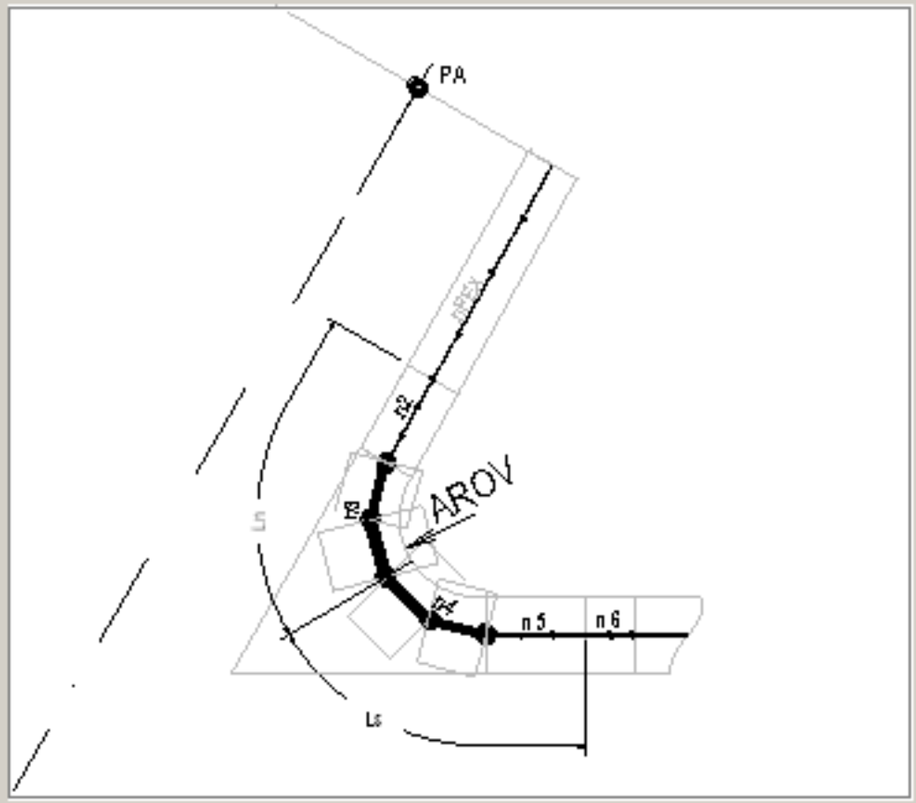

Calculation output | Output of storing, loading ...

ROHR2 31.0 beta - FESU - [I:\Schul+Präsentation\Tutorials\English\FESU\Tank_Torispherical-head_with_nozzle\Step_0\sub_001.r2fesu*]

File Edit Properties Results Documentation View Options Window Help

F1 for Help | PA=0.0bar TA=0°C | 0, 0, 0

Input | Model | Result

Intersection

Name: I1

Superelement | is intersected with jacket

Type of intersection

(•) Nozzle ( ) Trunion ( ) Bore

Fillet on the surface (AROV): 0 mm

Factor for add. thickness at sharp-edged intersection: 0

Scaling factor for with ln (analysis region on the nozzle): 1

Scaling factor for with ls (analysis region on the jacket): 1

Distribution in the region of the intersection

Region	n0	n1	n2	n3	n4	n5	n6	n7
No. of elements	3	0	3	3	3	3	2	0

Type of internal projection

(•) No internal projection
( ) Parallel to intersection line
( ) Orthogonal to the nozzle

Length of the internal projection: 0 mm

Reinforcing pad

[ ] with reinforcing pad Type of model: ( ) single-shell (•) double-shell

Width of the reinforcing pad (AKrag): 0 mm

Thickness of the reinforcing pad: 0 mm

No. of elements on the reinforcing pad (nFEK): 3

Material:

OK | Cancel | Default

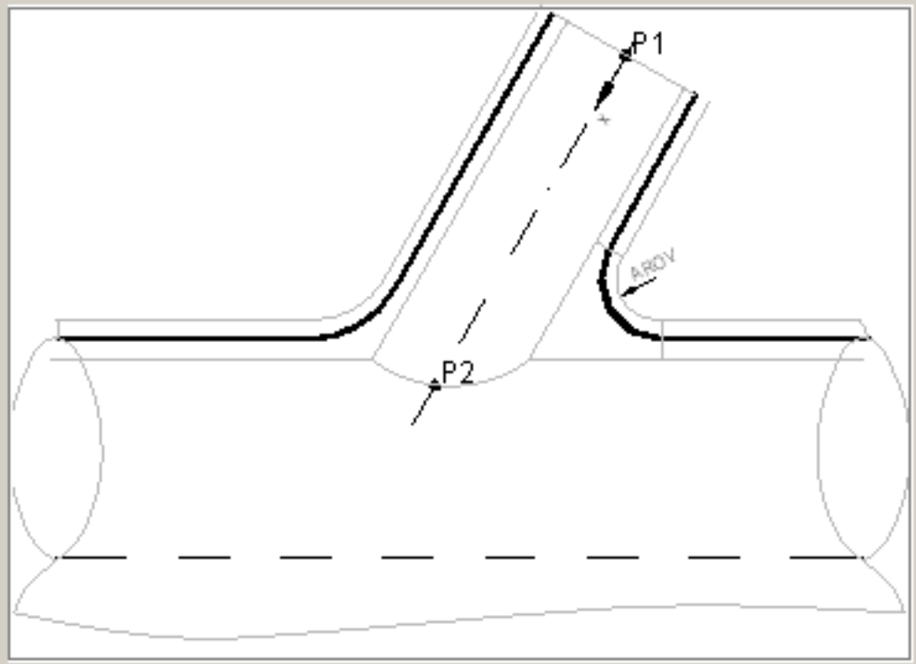

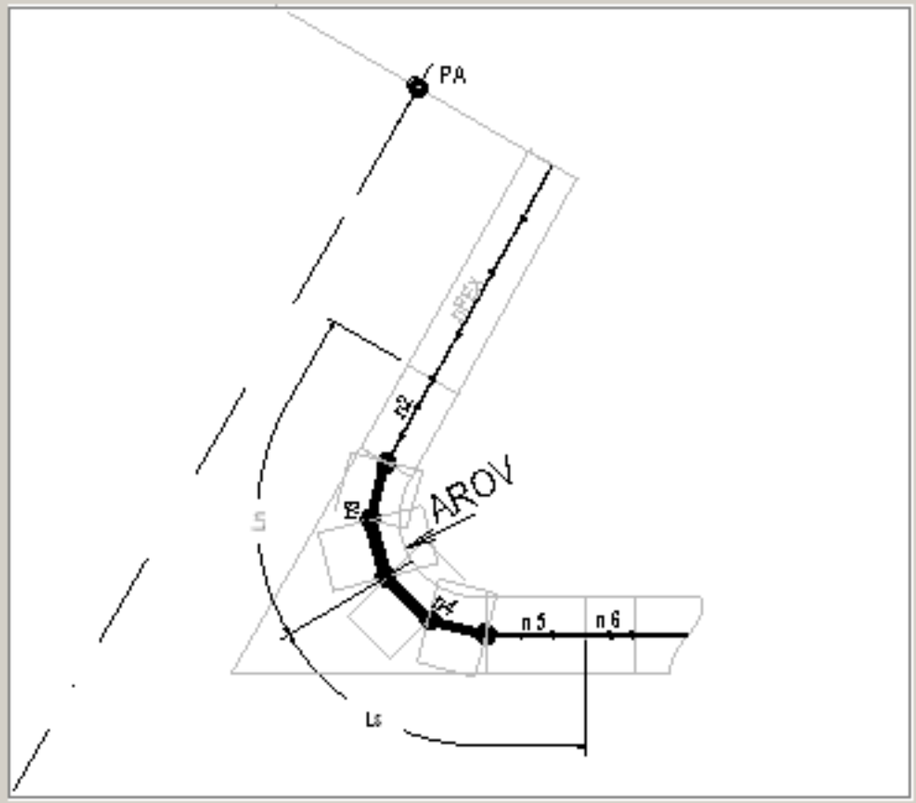

Calculation output | Output of storing, loading ...

Za
Ya Xa

ROHR2 31.0 beta - FESU - [I:\Schul+Präsentation\Tutorials\English\FESU\Tank_Torispherical-head_with_nozzle\Step_0\sub_001.r2fesu*]

File Edit Properties Results Documentation View Options Window Help

F1 for Help | PA=0.0bar TA=0°C | 0, 0, 0

Input | Model | Result

Txt Txt Txt Bmp Meta file HP GL

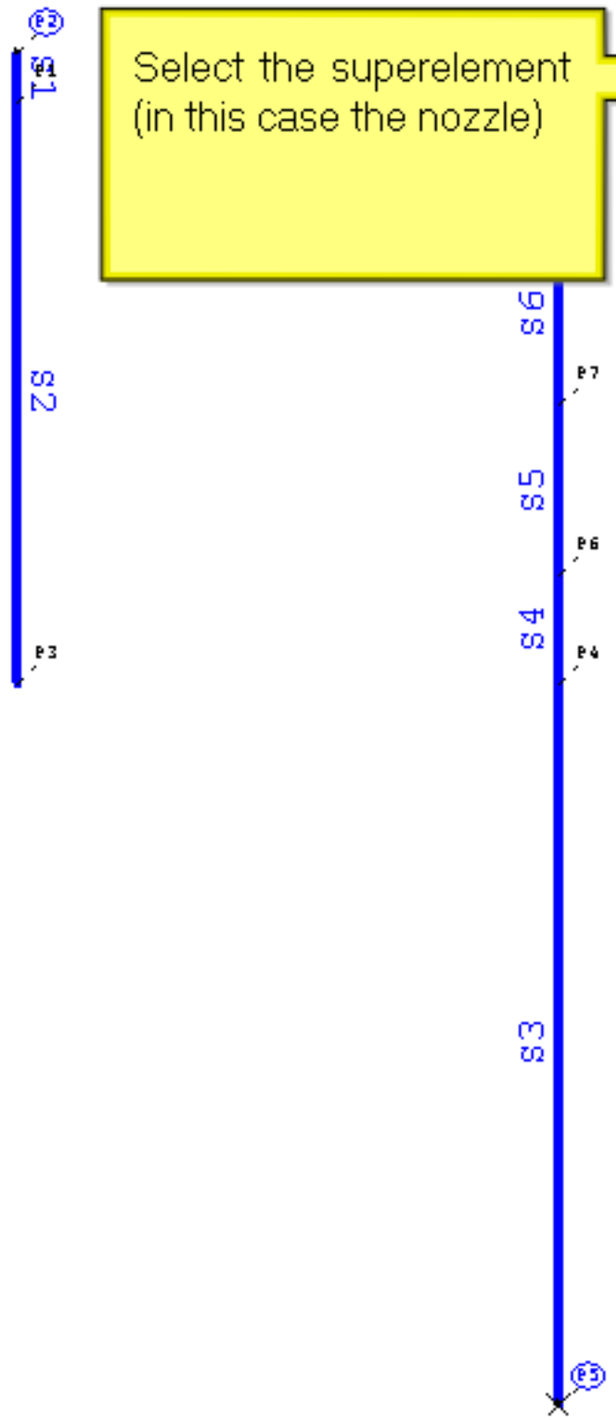

Select the superelement (in this case the nozzle)

Intersection

Name: I1

Superelement | is intersected with jacket

Type of intersection: Nozzle | Trunion | Bore

Fillet on the surface (AROV): 0

Factor for add. thickness at sharp-edged intersection: 0

Scaling factor for with ln (analysis region on the nozzle): 1

Scaling factor for with ls (analysis region on the jacket): 1

Distribution in the region of the intersection

Region	n0	n1	n2	n3	n4	n5	n6	n7
No. of elements	3	0	3	3	3	3	2	0

Type of internal projection

- No internal projection
- Parallel to intersection line
- Orthogonal to the nozzle

Length of the internal projection: 0 mm

Reinforcing pad

with reinforcing pad | Type of model: single-shell | double-shell

Width of the reinforcing pad (AKrag): 0 mm

Thickness of the reinforcing pad: 0 mm

No. of elements on the reinforcing pad (nFEK): 3

Material

OK | Cancel | Default

Calculation output | Output of storing, loading ...

Za Ya Xa

ROHR2 31.0 beta - FESU - [I:\Schul+Präsentation\Tutorials\English\FESU\Tank_Torispherical-head_with_nozzle\Step_0\sub_001.r2fesu*]

File Edit Properties Results Documentation View Options Window Help

F1 for Help | PA=0.0bar TA=0°C | 0, 0, 0

Input | Model | Result

Txt Txt Txt Bmp Meta file HP GL

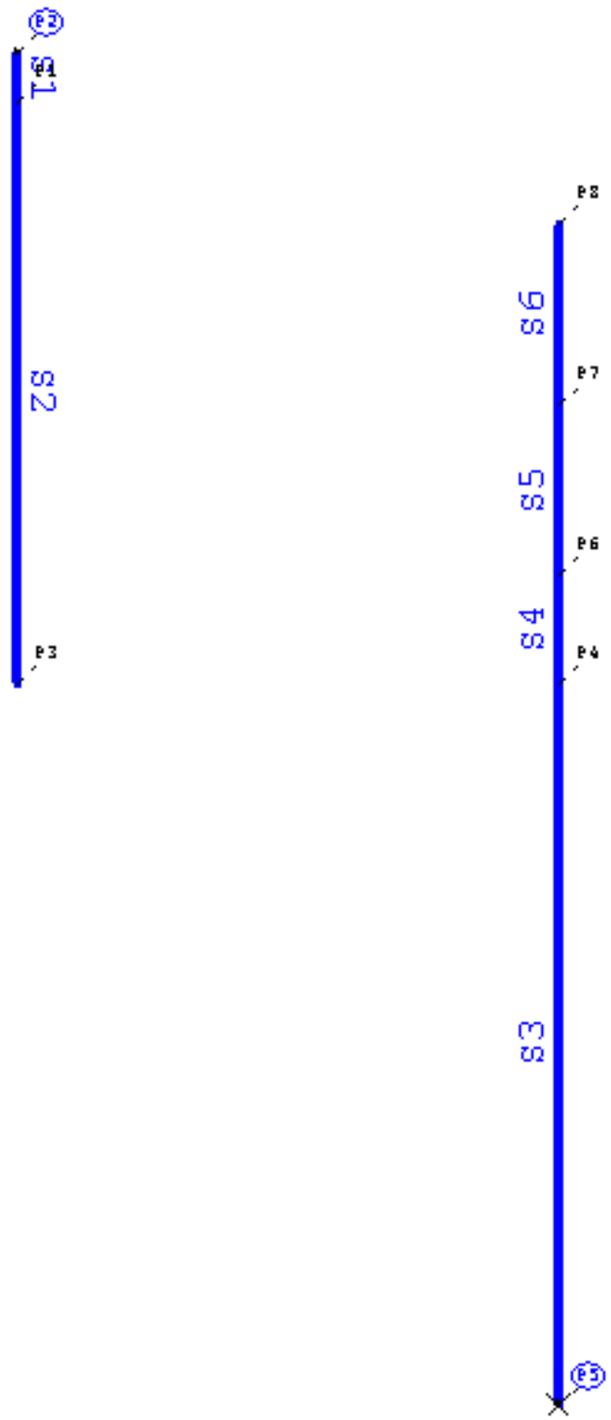

Intersection

Name: I1

Superelement | is intersected with jacket

Type of inter

Nozzle | Bore

S3 S4 S5 S6 S1 S2

Fillet on the su: 0

Factor for ado sharp-edged intersection: 0

Scaling factor for with In (analysis region on the nozzle): 1

Scaling factor for with Is (analysis region on the jacket): 1

Distribution in the region of the intersection

Region	n0	n1	n2	n3	n4	n5	n6	n7
No. of elements	3	0	3	3	3	3	2	0

Type of internal projection

- (•) No internal projection
- ( ) Parallel to intersection line
- ( ) Orthogonal to the nozzle

Length of the internal projection: 0 mm

Reinforcing pad

[ ] with reinforcing pad Type of model: ( ) single-shell (•) double-shell

Width of the reinforcing pad (AKrag): 0 mm

Thickness of the reinforcing pad: 0 mm

No. of elements on the reinforcing pad (nFEK): 3

Material

OK | Cancel | Default

Calculation output | Output of storing, loading ...

Za Ya Xa

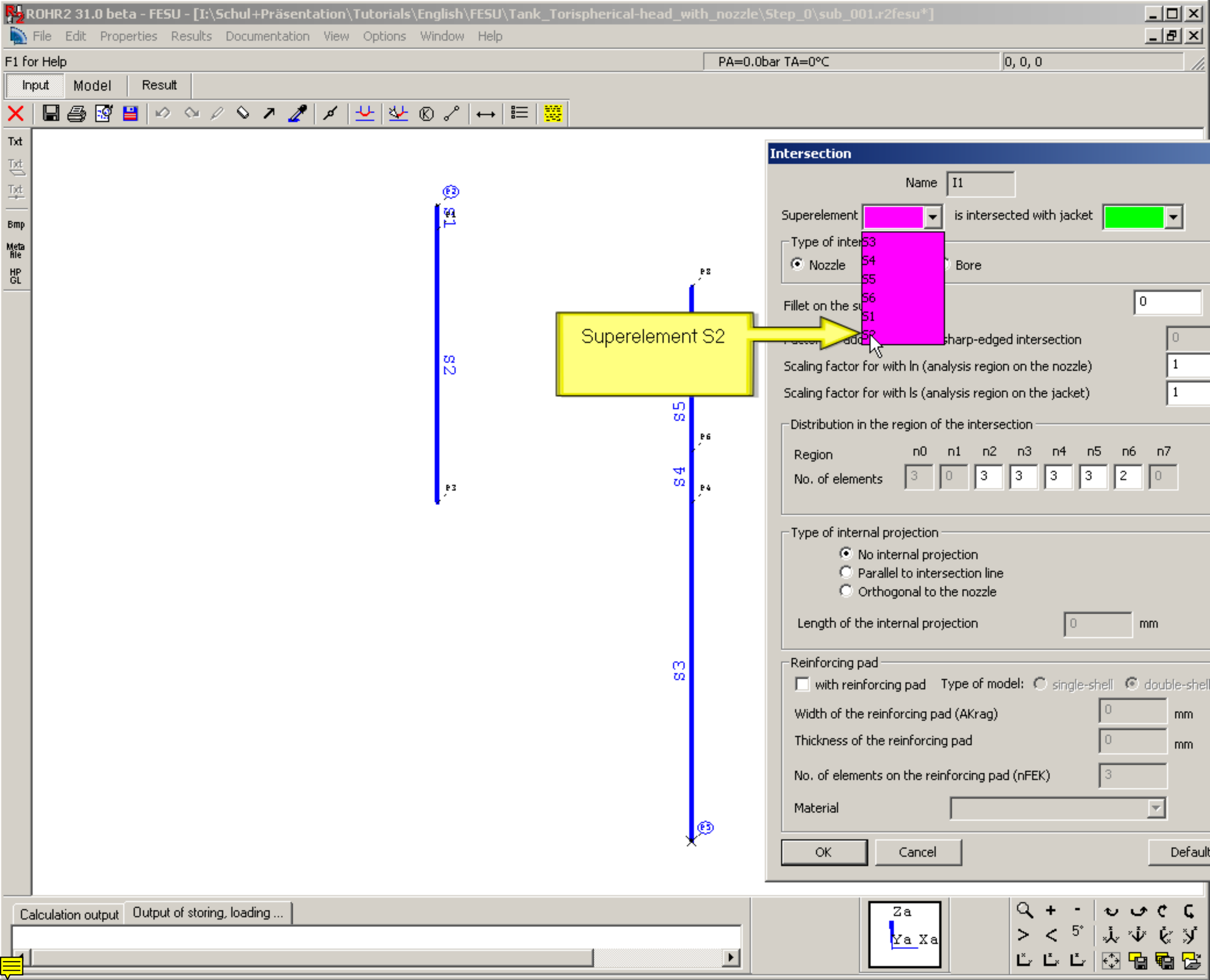
ROHR2 31.0 beta - FESU - [I:\Schul+Präsentation\Tutorials\English\FESU\Tank_Torispherical-head_with_nozzle\Step_0\sub_001.r2fesu*]
File Edit Properties Results Documentation View Options Window Help
F1 for Help
PA=0.0bar TA=0°C
0, 0, 0
Input Model Result
Intersection
Name I1
Superelement
is intersected with jacket
Type of inter
Nozzle
Bore
S3
S4
S5
S6
S1
S2
Superelement S2
Fillet on the su
sharp-edged intersection
Scaling factor for with ln (analysis region on the nozzle)
Scaling factor for with ls (analysis region on the jacket)
Distribution in the region of the intersection
Region n0 n1 n2 n3 n4 n5 n6 n7
No. of elements 3 0 3 3 3 3 2 0
Type of internal projection
No internal projection
Parallel to intersection line
Orthogonal to the nozzle
Length of the internal projection 0 mm
Reinforcing pad
with reinforcing pad
Type of model: single-shell double-shell
Width of the reinforcing pad (AKrag) 0 mm
Thickness of the reinforcing pad 0 mm
No. of elements on the reinforcing pad (nFEK) 3
Material
OK
Cancel
Default
Calculation output
Output of storing, loading ...

ROHR2 31.0 beta - FESU - [I:\Schul+Präsentation\Tutorials\English\FESU\Tank_Torispherical-head_with_nozzle\Step_0\sub_001.r2fesu*]

File Edit Properties Results Documentation View Options Window Help

F1 for Help | PA=0.0bar TA=0°C | 0, 0, 0

Input | Model | Result

Txt | Txt | Txt | Bmp | Meta file | HP GL

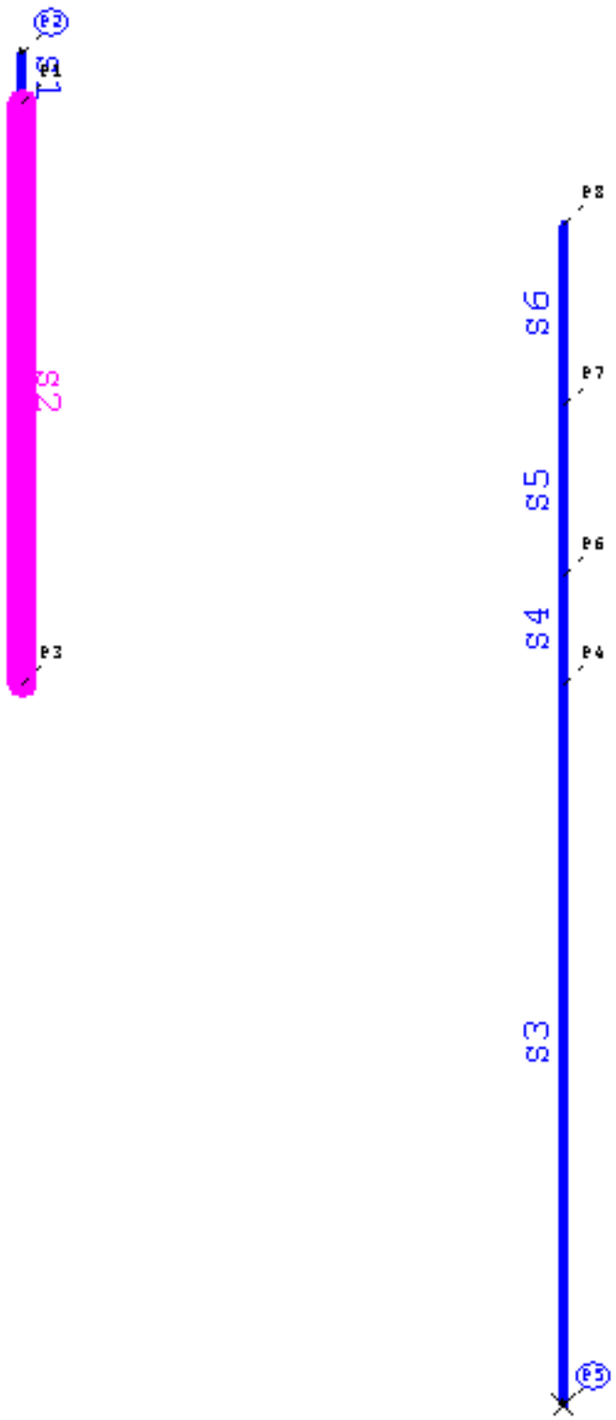

Intersection

Name: I1

Superelement: S2 | is intersected with jacket

Type of intersection: (•) Nozzle ( ) Trunion ( ) Bore

Fillet on the surface (AROV): 0

Factor for add. thickness at sharp-edged intersection: 0

Scaling factor for with ln (analysis region on the nozzle): 1

Scaling factor for with ls (analysis region on the jacket): 1

Distribution in the region of the intersection

Region	n0	n1	n2	n3	n4	n5	n6	n7
No. of elements	3	0	3	3	3	3	2	0

Type of internal projection

(•) No internal projection
( ) Parallel to intersection line
( ) Orthogonal to the nozzle

Length of the internal projection: 0 mm

Reinforcing pad

[ ] with reinforcing pad | Type of model: ( ) single-shell (•) double-shell

Width of the reinforcing pad (AKrag): 0 mm

Thickness of the reinforcing pad: 0 mm

No. of elements on the reinforcing pad (nFEK): 3

Material:

OK | Cancel | Default

Calculation output | Output of storing, loading ...

Za
Ya Xa

ROHR2 31.0 beta - FESU - [I:\Schul+Präsentation\Tutorials\English\FESU\Tank_Torispherical-head_with_nozzle\Step_0\sub_001.r2fesu*]

File Edit Properties Results Documentation View Options Window Help

F1 for Help | PA=0.0bar TA=0°C | 0, 0, 0

Input | Model | Result

Txt | Txt | Txt | Bmp | Meta file | HP GL

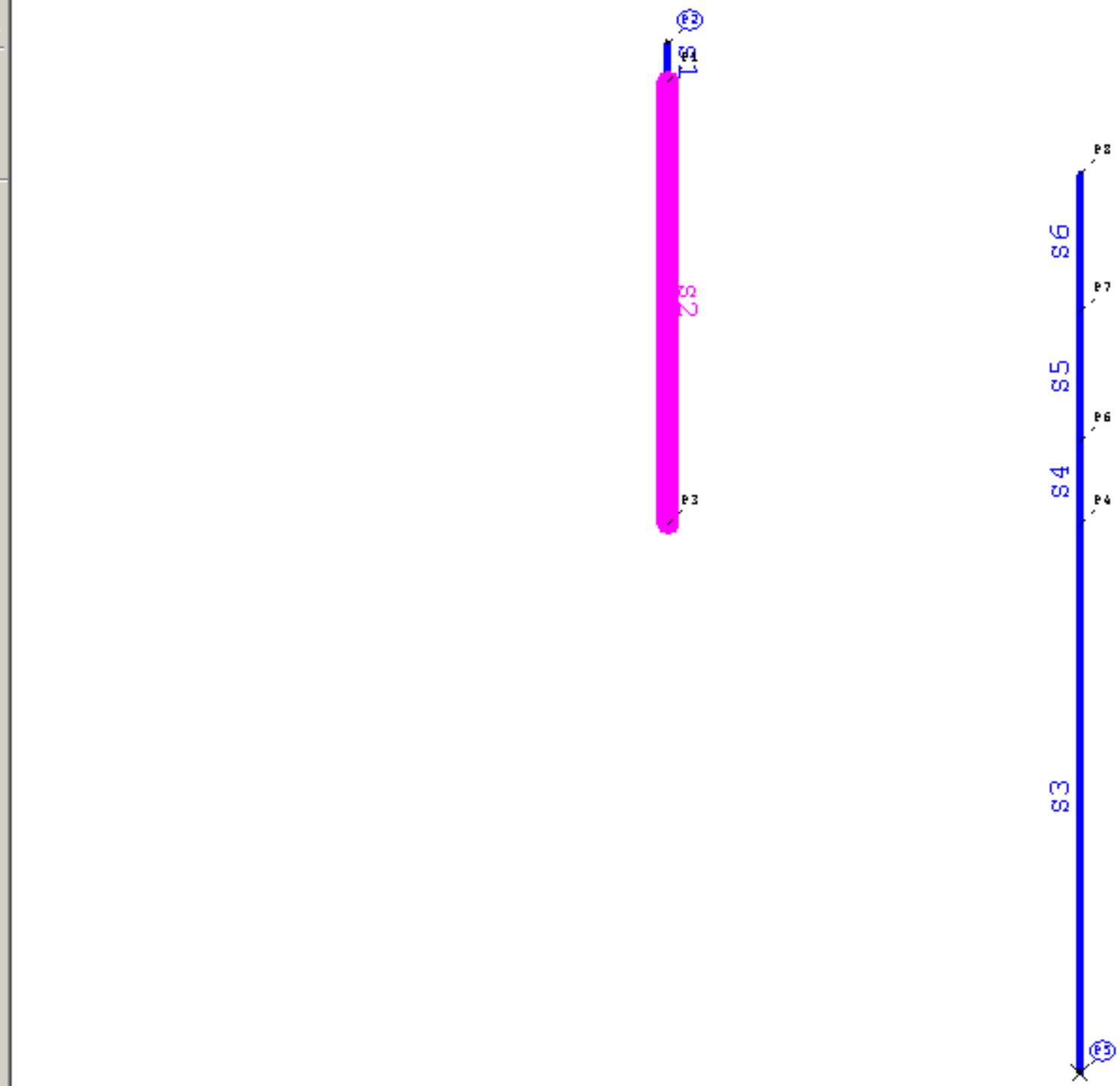

Intersection

Name: I1

Superelement: S2 | is intersected with jacket

Type of intersection: (•) Nozzle ( ) Trunion ( ) Bore

Fillet on the surface (AROV): 0

Factor for add. thickness at sharp-edged intersection: 0

Scaling factor for with ln (analysis region on the nozzle): 1

Scaling factor for with ls (analysis region on the jacket): 1

Distribution in the region of the intersection

Region	n0	n1	n2	n3	n4	n5	n6	n7
No. of elements	3	0	3	3	3	3	2	0

Type of internal projection

(•) No internal projection
( ) Parallel to intersection line
( ) Orthogonal to the nozzle

Length of the internal projection: 0 mm

Reinforcing pad

[ ] with reinforcing pad | Type of model: ( ) single-shell (•) double-shell

Width of the reinforcing pad (AKrag): 0 mm

Thickness of the reinforcing pad: 0 mm

No. of elements on the reinforcing pad (nFEK): 3

Material:

OK | Cancel | Default

Calculation output | Output of storing, loading ...

Za
Ya Xa

ROHR2 31.0 beta - FESU - [I:\Schul+Präsentation\Tutorials\English\FESU\Tank_Torispherical-head_with_nozzle\Step_0\sub_001.r2fesu*]

File Edit Properties Results Documentation View Options Window Help

F1 for Help | PA=0.0bar TA=0°C | 0, 0, 0

Input | Model | Result

Txt | Txt | Txt | Bmp | Meta file | HP GL

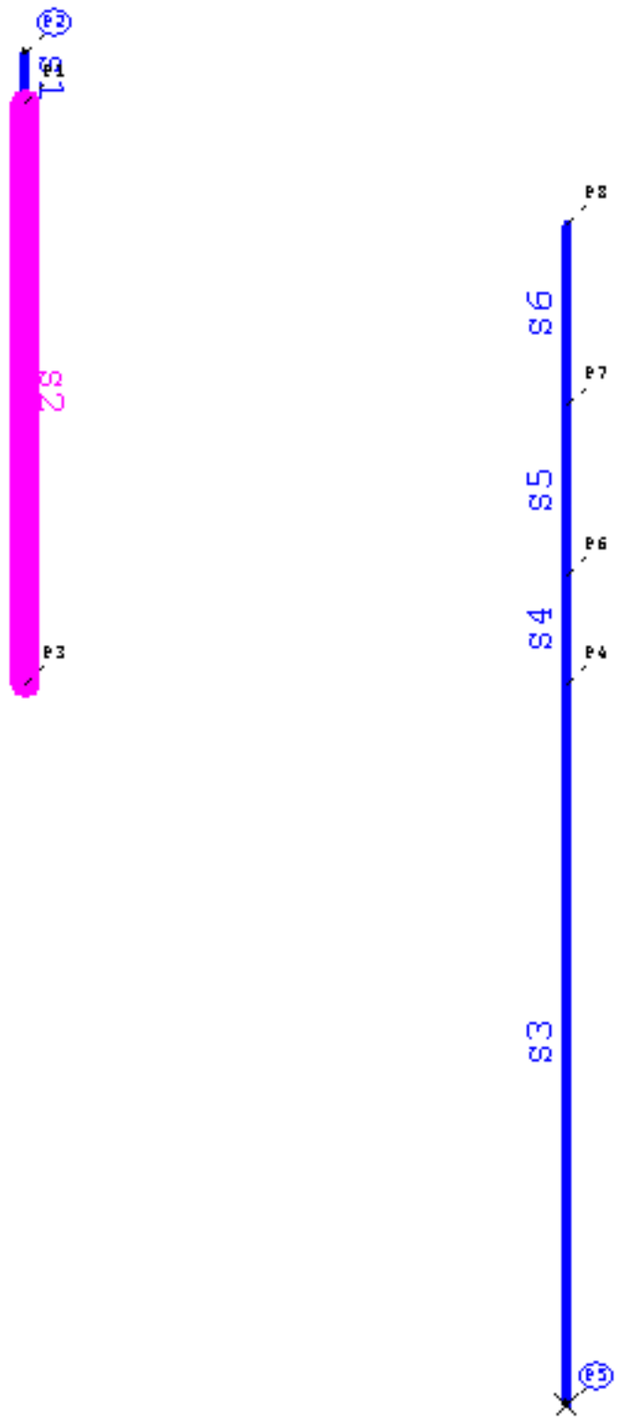

Intersection

Name: I1

Superelement: S2 is intersected with jacket: J1 / J2

Select the jacket

Fillet: 0

Factor for add. thickness at sharp-edged intersection: 0

Scaling factor for with ln (analysis region on the nozzle): 1

Scaling factor for with ls (analysis region on the jacket): 1

Distribution in the region of the intersection

Region	n0	n1	n2	n3	n4	n5	n6	n7
No. of elements	3	0	3	3	3	3	2	0

Type of internal projection

- (•) No internal projection
- ( ) Parallel to intersection line
- ( ) Orthogonal to the nozzle

Length of the internal projection: 0 mm

Reinforcing pad

[ ] with reinforcing pad Type of model: ( ) single-shell (•) double-shell

Width of the reinforcing pad (AKrag): 0 mm

Thickness of the reinforcing pad: 0 mm

No. of elements on the reinforcing pad (nFEK): 3

Material:

OK | Cancel | Default

Calculation output | Output of storing, loading ...

Za
Ya Xa

ROHR2 31.0 beta - FESU - [I:\Schul+Präsentation\Tutorials\English\FESU\Tank_Torispherical-head_with_nozzle\Step_0\sub_001.r2fesu*]

File Edit Properties Results Documentation View Options Window Help

F1 for Help | PA=0.0bar TA=0°C | 0, 0, 0

Input | Model | Result

Txt | Txt | Txt | Bmp | Meta file | HP GL

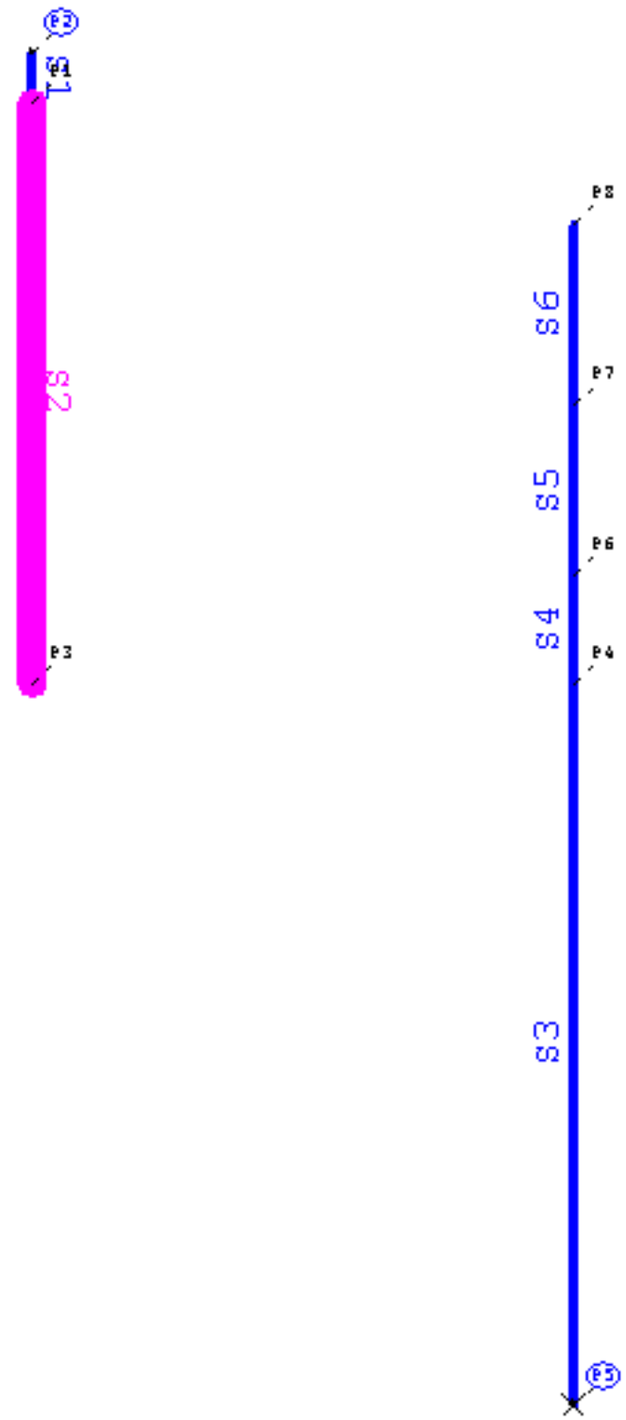

Intersection

Name: I1

Superelement: S2 is intersected with jacket: J1 / J2

Type of intersection: (•) Nozzle ( ) Trunion ( ) Bore

Fillet on the surface (AROV): 0

Factor for add. thickness at sharp-edged intersection: 0

Scaling factor for with ln (analysis region on the nozzle): 1

Scaling factor for with ls (analysis region on the jacket): 1

Distribution in the region of the intersection

Region	n0	n1	n2	n3	n4	n5	n6	n7
No. of elements	3	0	3	3	3	3	2	0

Type of internal projection

( ) No internal projection
( ) Parallel to intersection line
( ) Orthogonal to the nozzle

Length of the internal projection: 0 mm

Reinforcing pad

[ ] with reinforcing pad Type of model: ( ) single-shell (•) double-shell

Width of the reinforcing pad (AKrag): 0 mm

Thickness of the reinforcing pad: 0 mm

No. of elements on the reinforcing pad (nFEK): 3

Material:

OK | Cancel | Default

Calculation output | Output of storing, loading ...

Za
Ya Xa

ROHR2 31.0 beta - FESU - [I:\Schul+Präsentation\Tutorials\English\FESU\Tank_Torispherical-head_with_nozzle\Step_0\sub_001.r2fesu*]

File Edit Properties Results Documentation View Options Window Help

F1 for Help | PA=0.0bar TA=0°C | 0, 0, 0

Input | Model | Result

Txt | Txt | Txt | Bmp | Meta file | HP GL

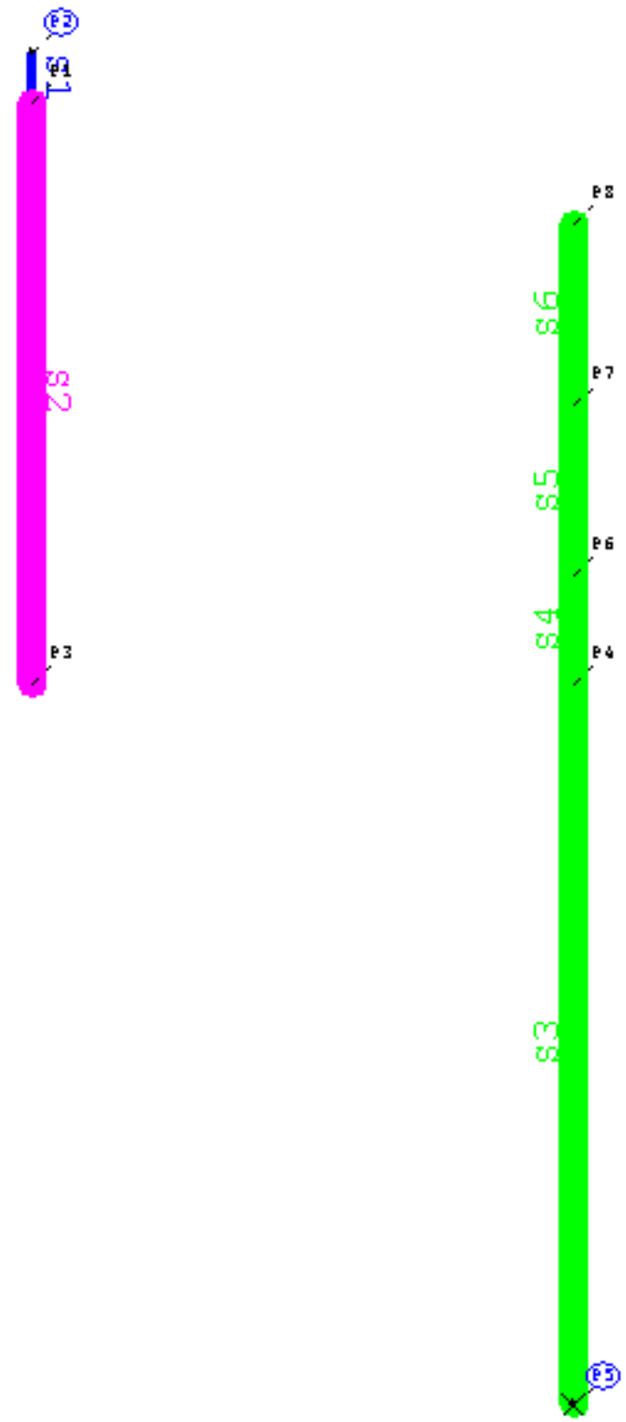

Intersection

Name: I1

Superelement: S2 is intersected with jacket: J1

Type of intersection
- (•) Nozzle ( ) Trunion ( ) Bore

Fillet on the surface (AROV): 0

Factor for add. thickness at sharp-edged intersection: 0

Scaling factor for with ln (analysis region on the nozzle): 1

Scaling factor for with ls (analysis region on the jacket): 1

Distribution in the region of the intersection

Region	n0	n1	n2	n3	n4	n5	n6	n7
No. of elements	3	0	3	3	3	3	2	0

Type of internal projection
- (•) No internal projection
- ( ) Parallel to intersection line
- ( ) Orthogonal to the nozzle

Length of the internal projection: 0 mm

Reinforcing pad
- [ ] with reinforcing pad Type of model: ( ) single-shell (•) double-shell
- Width of the reinforcing pad (AKrag): 0 mm
- Thickness of the reinforcing pad: 0 mm
- No. of elements on the reinforcing pad (nFEK): 3
- Material:

OK | Cancel | Default

Calculation output | Output of storing, loading ...

Za
Ya Xa

ROHR2 31.0 beta - FESU - [I:\Schul+Präsentation\Tutorials\English\FESU\Tank_Torispherical-head_with_nozzle\Step_0\sub_001.r2fesu*]

File Edit Properties Results Documentation View Options Window Help

F1 for Help | PA=0.0bar TA=0°C | 0, 0, 0

Input | Model | Result

Txt | Txt | Txt | Bmp | Meta file | HP GL

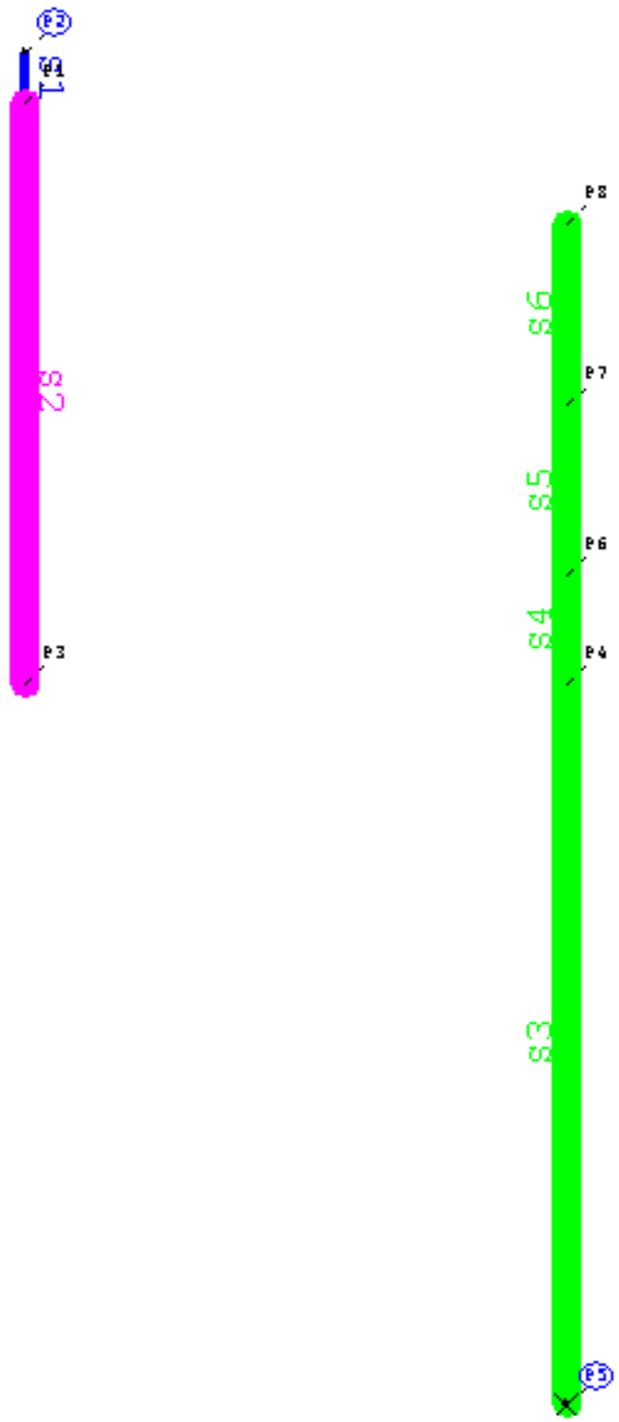

Intersection

Name: I1

Superelement: S2 is intersected with jacket: J1

Type of intersection
- (•) Nozzle ( ) Trunion ( ) Bore

Fillet on the surface (AROV): 0

Factor for add. thickness at sharp-edged intersection: 0

Scaling factor for with ln (analysis region on the nozzle): 1

Scaling factor for with ls (analysis region on the jacket): 1

Distribution in the region of the intersection

Region	n0	n1	n2	n3	n4	n5	n6	n7
No. of elements	3	0	3	3	3	3	2	0

Type of internal projection
- (•) No internal projection
- ( ) Parallel to intersection line
- ( ) Orthogonal to the nozzle

Length of the internal projection: 0 mm

Reinforcing pad
- [ ] with reinforcing pad Type of model: ( ) single-shell (•) double-shell
- Width of the reinforcing pad (AKrag): 0 mm
- Thickness of the reinforcing pad: 0 mm
- No. of elements on the reinforcing pad (nFEK): 3
- Material:

OK | Cancel | Default

Calculation output | Output of storing, loading ...

Za
Ya Xa

ROHR2 31.0 beta - FESU - [I:\Schul+Präsentation\Tutorials\English\FESU\Tank_Torispherical-head_with_nozzle\Step_0\sub_001.r2fesu*]

File Edit Properties Results Documentation View Options Window Help

PA=0.0bar TA=0°C | 0, 0, 0

Input | Model

Click on 'Model' to generate the mesh

Txt
Txt
Txt
Bmp
Meta file
HP GL

P1
P2
P3
P4
P5
P6
P7
P8
I1
S2
S3
S4
S5
S6

Now the intersection is created.

Calculation output | Output of storing, loading ...

Za
Ya Xa

ROHR2 31.0 beta - FESU - [I:\Schul+Präsentation\Tutorials\English\FESU\Tank_Torispherical-head_with_nozzle\Step_0\sub_001.r2fesu*]

File Edit Properties Results Documentation View Options Window Help

F1 for Help | PA=0.0bar TA=0°C | 0, 0, 0

Input | Model | Result

Txt
Txt
Txt
Bmp
Meta file
HP GL

P2
P1
S2
P8
S6
P7

Insert circumferential distribution

For the listed jackets no circumferential distribution was inserted.
Please insert the circumferential distribution for these jackets.

J1
J2

max. outer diameter 2000 mm
min. outer diameter 0 mm
Circumferential distribution: 55

OK Cancel

S3
P3

Here the single jackets are listed.

Calculation output | Output of storing, loading ...

Za
Ya Xa

ROHR2 31.0 beta - FESU - [I:\Schul+Präsentation\Tutorials\English\FESU\Tank_Torispherical-head_with_nozzle\Step_0\sub_001.r2fesu*]

File Edit Properties Results Documentation View Options Window Help

F1 for Help | PA=0.0bar TA=0°C | 0, 0, 0

Input | Model | Result

Txt
Txt
Txt
Bmp
Meta file
HP GL

P2
P1
S2
P8
S6
P7
S3
P3

Insert circumferential distribution

For the listed jackets no circumferential distribution was inserted.

Please insert the circumferential distribution for these jackets.

J1
J2

max. outer diameter 2000 mm

min. outer diameter 0 mm

Circumferential distribution: 55

OK Cancel

Insert the circumferential distribution for the selected jacket

Calculation output | Output of storing, loading ...

Za
Ya Xa

ROHR2 31.0 beta - FESU - [I:\Schul+Präsentation\Tutorials\English\FESU\Tank_Torispherical-head_with_nozzle\Step_0\sub_001.r2fesu*]

File Edit Properties Results Documentation View Options Window Help

F1 for Help | PA=0.0bar TA=0°C | 0, 0, 0

Input | Model | Result

Txt
Txt
Txt
Bmp
Meta file
HP GL

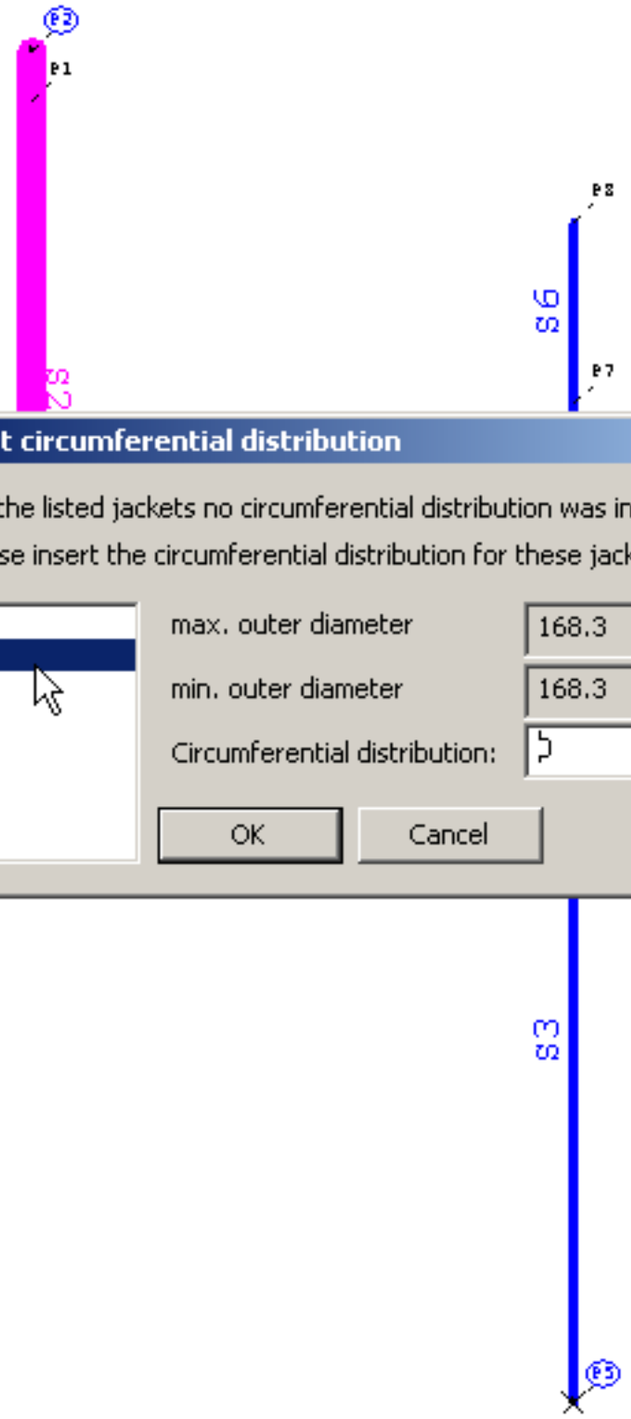

Insert circumferential distribution

For the listed jackets no circumferential distribution was inserted.

Please insert the circumferential distribution for these jackets.

J1
J2

max. outer diameter 168.3 mm

min. outer diameter 168.3 mm

Circumferential distribution: 5

OK | Cancel

Calculation output | Output of storing, loading ...

Za
Ya Xa

ROHR2 31.0 beta - FESU - [I:\Schul+Präsentation\Tutorials\English\FESU\Tank_Torispherical-head_with_nozzle\Step_0\sub_001.r2fesu*]

File Edit Properties Results Documentation View Options Window Help

F1 for Help | PA=0.0bar TA=0°C | 0, 0, 0

Input | Model | Result

Txt
Txt
Txt
Bmp
Meta file
HP GL

P2
P1
S2
P8
S6
P7

Insert circumferential distribution

For the listed jackets no circumferential distribution was inserted.

Please insert the circumferential distribution for these jackets.

J1
J2

max. outer diameter 168.3 mm

min. outer diameter 168.3 mm

Circumferential distribution: 25

OK Cancel

S3
P3

Calculation output | Output of storing, loading ...

Za
Ya Xa

ROHR2 31.0 beta - FESU - [I:\Schul+Präsentation\Tutorials\English\FESU\Tank_Torispherical-head_with_nozzle\Step_0\sub_001.r2fesu*]

File Edit Properties Results Documentation View Options Window Help

F1 for Help | PA=0.0bar TA=0°C | 0, 0, 0

Input | Model | Result

Txt
Txt
Txt
Bmp
Meta file
HP GL

P2
P1
S2
P8
S6
P7

Insert circumferential distribution

For the listed jackets no circumferential distribution was inserted.

Please insert the circumferential distribution for these jackets.

J1
J2

max. outer diameter 168.3 mm

min. outer diameter 168.3 mm

Circumferential distribution: 25

OK | Cancel

Click on 'OK'

S3
P3

Calculation output | Output of storing, loading ...

Za
Ya Xa

ROHR2 31.0 beta - FESU - [I:\Schul+Präsentation\Tutorials\English\FESU\Tank_Torispherical-head_with_nozzle\Step_0\sub_001.r2fesu]

File Edit Properties Results Documentation View Options Window Help

Coordinate system 2 | PA=0.0bar TA=0°C | 0, 0, 0

Input | Model | Result

Txt
Txt
Txt
Bmp
Meta file
HP GL

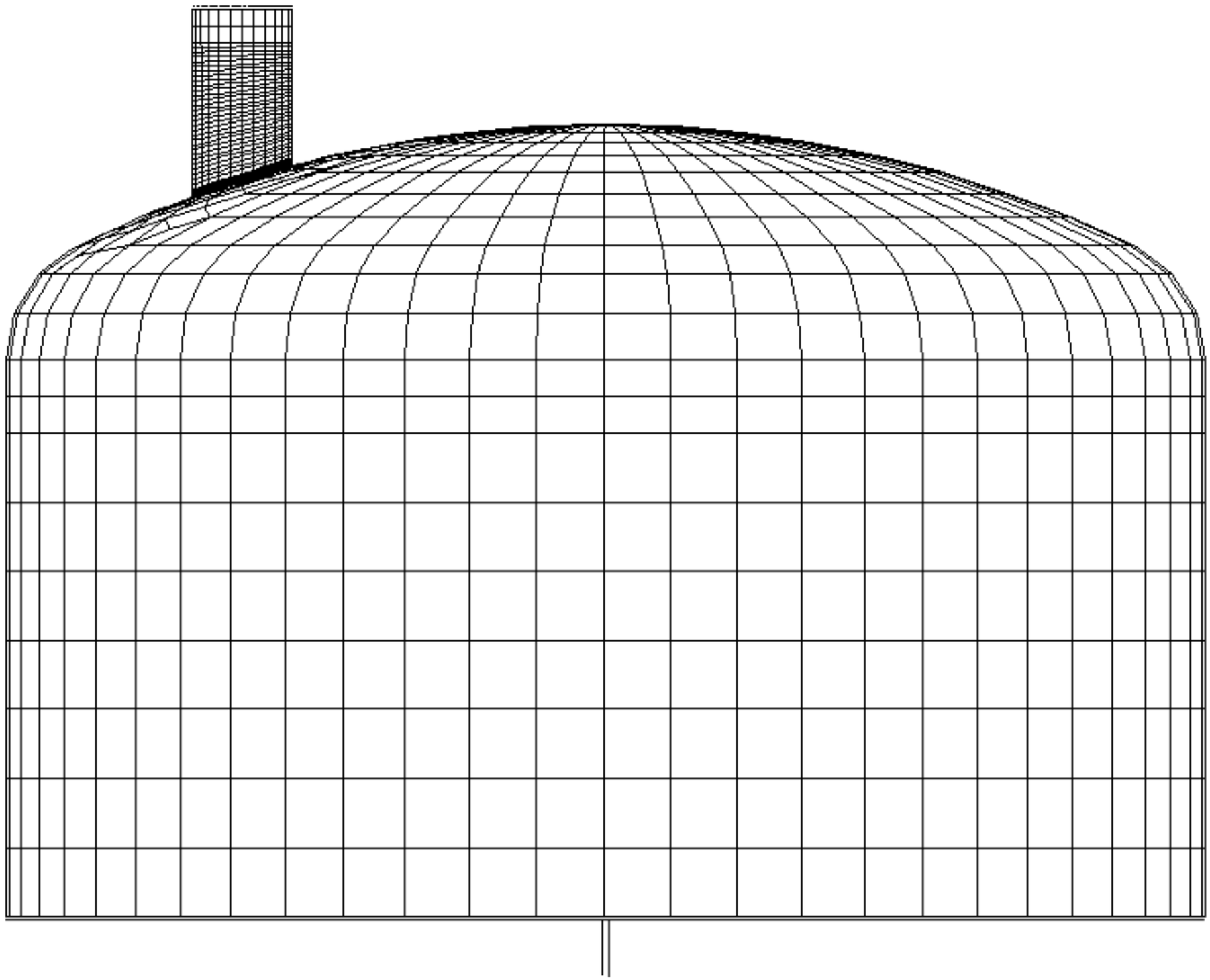

Calculation output | Output of storing, loading ...

11:16:21 END FESU Total Time dt= 0.4

Za
Ya Xa

ROHR2 31.0 beta - FESU - [I:\Schul+Präsentation\Tutorials\English\FESU\Tank_Torispherical-head_with_nozzle\Step_0\sub_001.r2fesu]

File Edit Properties Results Documentation View Options Window Help

Coordinate system 2 | PA=0.0bar TA=0°C | 0, 0, 0

Input | Model | Result

Txt
Txt
Txt
Bmp
Meta file
HP GL

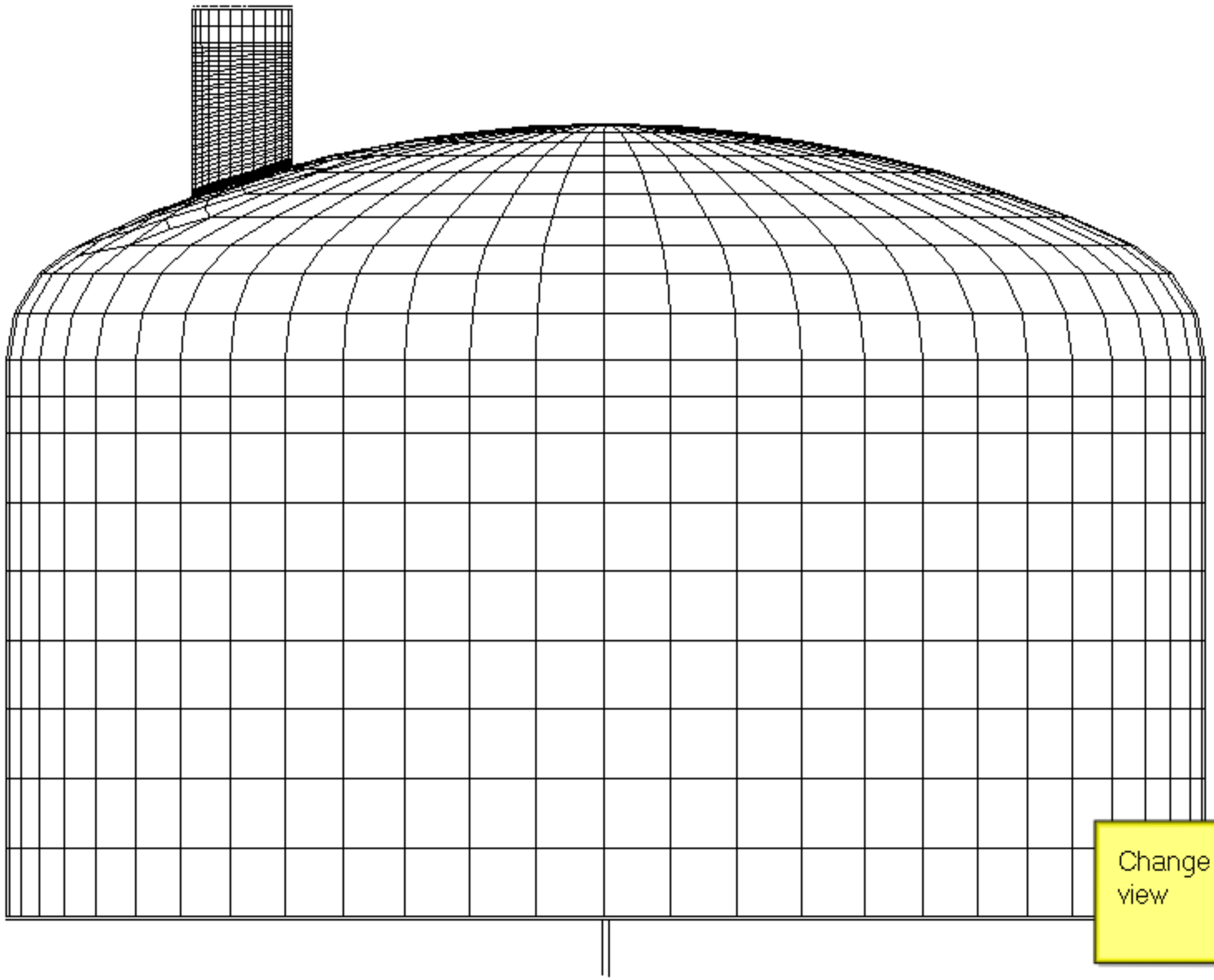

Change view

Calculation output | Output of storing, loading ...

11:16:21 END FESU Total Time dt= 0.4

Za
Ya Xa

ROHR2 31.0 beta - FESU - [I:\Schul+Präsentation\Tutorials\English\FESU\Tank_Torispherical-head_with_nozzle\Step_0\sub_001.r2fesu]

File Edit Properties Results Documentation View Options Window Help

F1 for Help | PA=0.0bar TA=0°C | 0, 0, 0

Input | Model | Result

Txt
Txt
Txt
Bmp
Meta file
HP GL

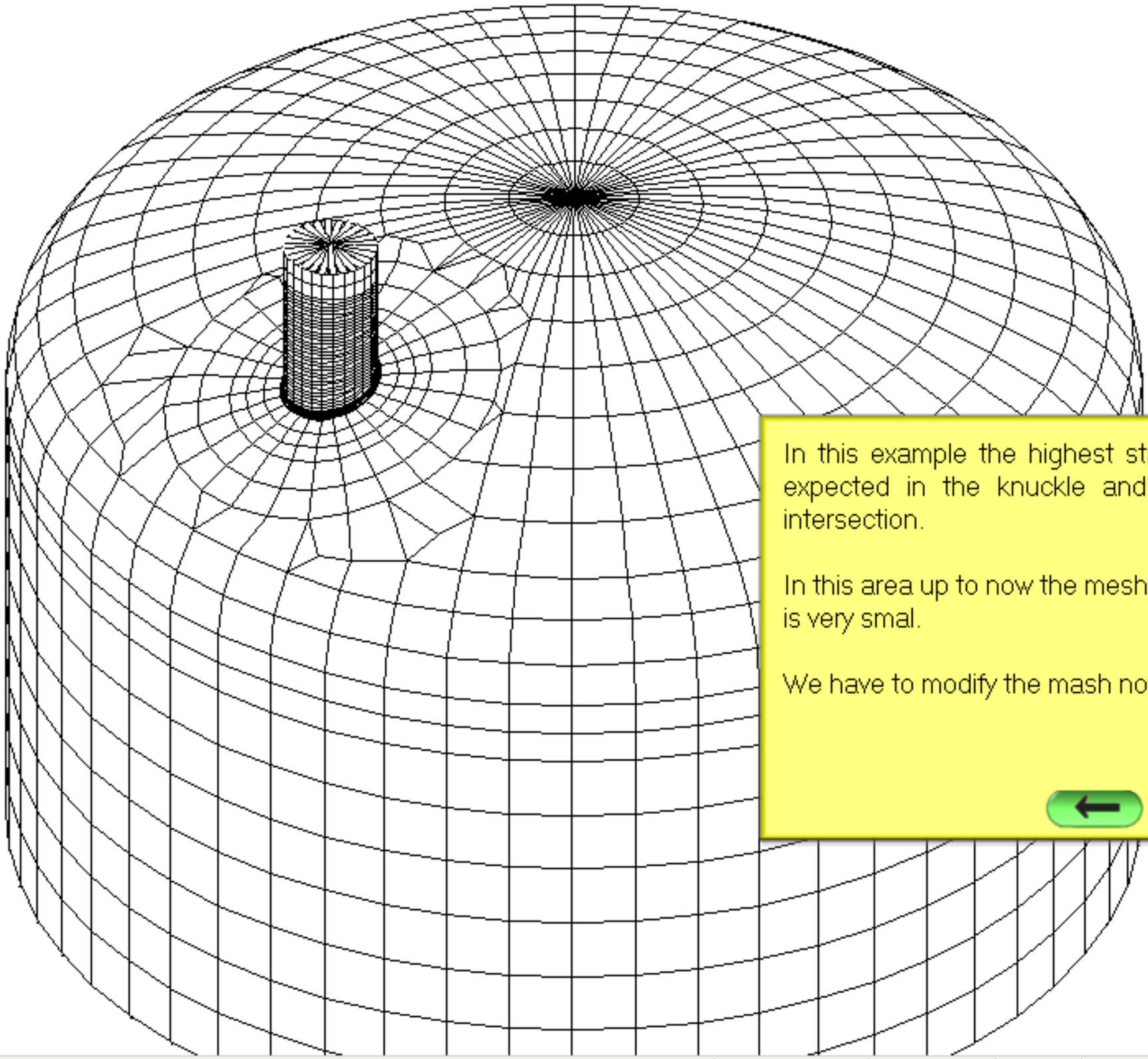

In this example the highest stress are expected in the knuckle and at the intersection.

In this area up to now the mesh density is very smal.

We have to modify the mash now.

Calculation output | Output of storing, loading ...

11:16:21 END FESU Total Time dt= 0.4

Za Ya Xa

ROHR2 31.0 beta - FESU - [I:\Schul+Präsentation\Tutorials\English\FESU\Tank_Torispherical-head_with_nozzle\Step_0\sub_001.r2fesu]

File Edit Properties Results Documentation View Options Window Help

Input mode

PA=0.0bar TA=0°C

0, 0, 0

Input

Input

To edit the mesh change to the input mode

Txt

Txt

Txt

Bmp

Meta file

HP GL

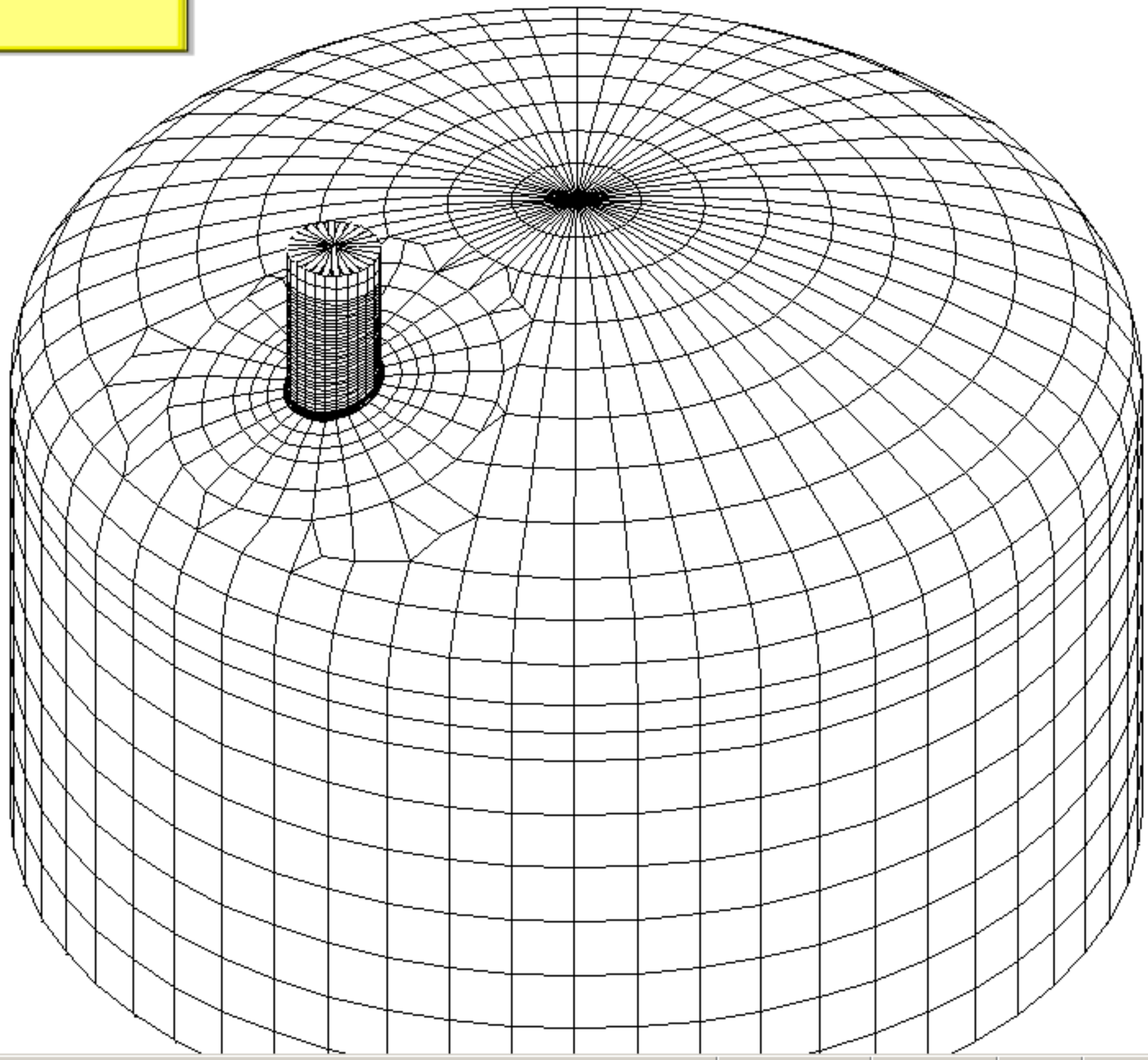

Calculation output | Output of storing, loading ...

11:16:21 END FESU Total Time dt= 0.4

Za

Ya Xa

5°

ROHR2 31.0 beta - FESU - [I:\Schul+Präsentation\Tutorials\English\FESU\Tank_Torispherical-head_with_nozzle\Step_0\sub_001.r2fesu]

File Edit Properties Results Documentation View Options Window Help

F1 for Help | PA=0.0bar TA=0°C | 0, 0, 0

Input | Model | Result

Txt
Txt
Txt
Bmp
Meta file
HP GL

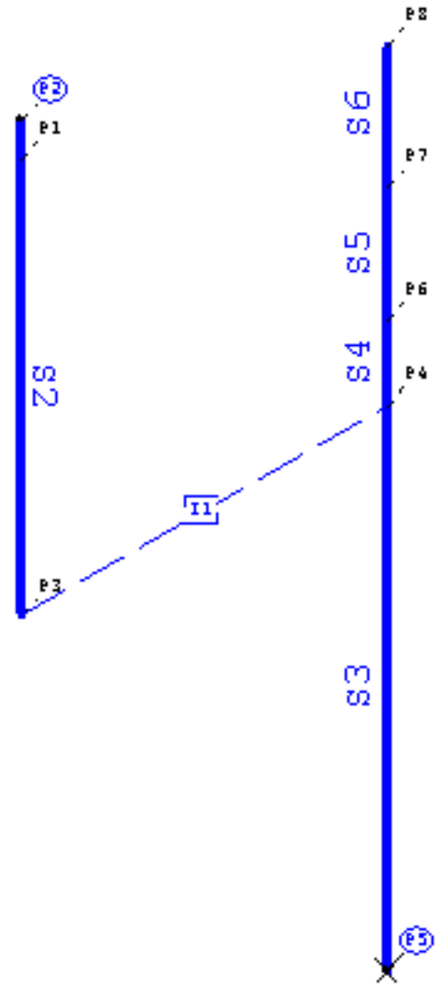

Calculation output | Output of storing, loading ...

11:16:21 END FESU Total Time dt= 0.4

Za
Ya
Xa

ROHR2 31.0 beta - FESU - [I:\Schul+Präsentation\Tutorials\English\FESU\Tank_Torispherical-head_with_nozzle\Step_0\sub_001.r2fesu]

File Edit Properties Results Documentation View Options Window Help

F1 for Help | PA=0.0bar TA=0°C | 0, 0, 0

Input | Model | Result

Txt
Txt
Txt
Bmp
Meta file
HP GL

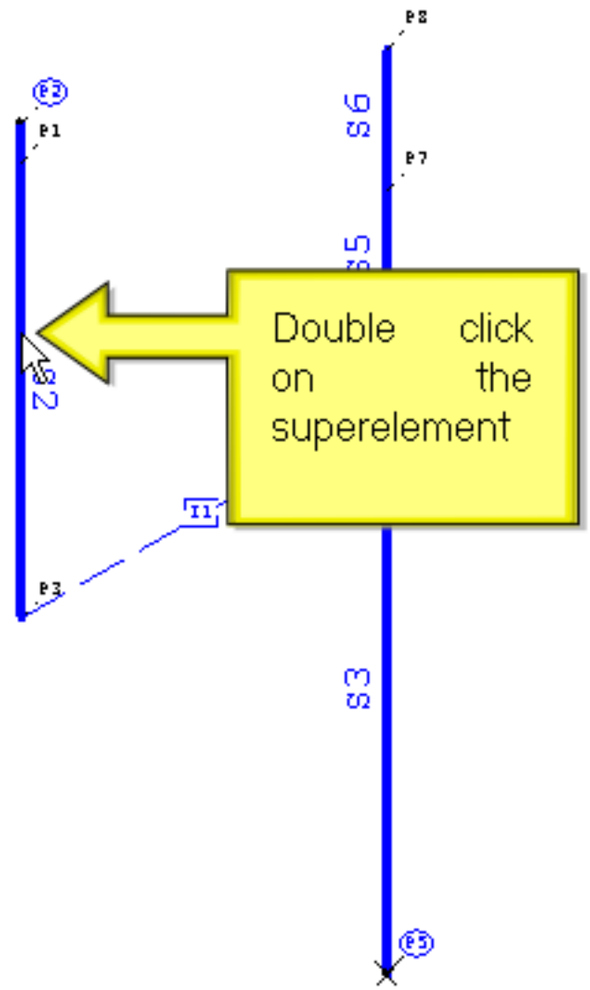

Calculation output | Output of storing, loading ...

11:16:21 END FESU Total Time dt= 0.4

Za
Ya
Xa

5°

ROHR2 31.0 beta - FESU - [I:\Schul+Präsentation\Tutorials\English\FESU\Tank_Torispherical-head_with_nozzle\Step_0\sub_001.r2fesu]

File Edit Properties Results Documentation View Options Window Help

F1 for Help | PA=0.0bar TA=0°C | 0, 0, 0

Input | Model | Result

Txt | Txt | Txt | Bmp | Meta file | HP GL

Properties cone

Name: S2 | Jacket: J2 | P1: P1 | P2: P3

Difference coordinates [mm]

DX= 0 | DY= 0 | DZ= -645.00019 | Length 645.00019

Type

- (•) centric
- ( ) excentric
- ( ) elliptic

local coordinate system

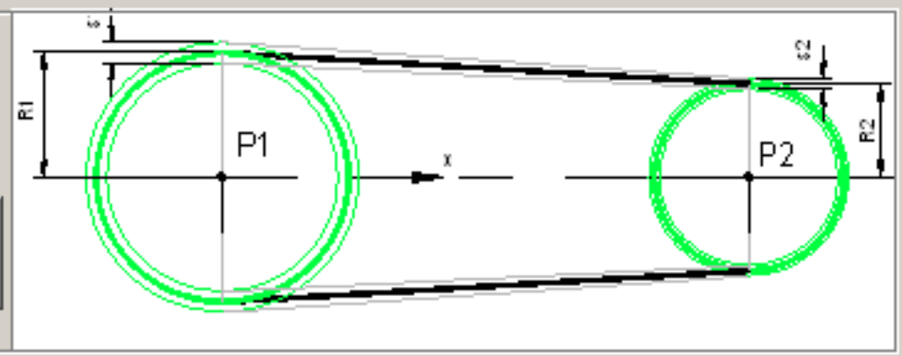

Material: ST35.8

Dimensions [mm]

(•) Insert mean radius ( ) Insert outer diameter

Point	Outer diameter	Mean radius	Wall thickness
P1: P1	Da1= 168.3	R1= 81.9	S1= 4.5
P2: P3	Da2= 168.3	R2= 81.9	S2= 4.5

Corrosion: 0 | Minus mill tolerance: 0.5625

Cross section definition for elliptic cones

Plane	Syp	Szp	Sym	Szm	Ry	Rz

New | Edit | Delete

Distribution

in axial direction: 30

Progression

OK | Cancel

30 elements are to much. Reduce the distribution to fifteen elements.

Calculation output | Output of storing, loading ...

11:16:21 END FESU Total Time dt= 0.4

ROHR2 31.0 beta - FESU - [I:\Schul+Präsentation\Tutorials\English\FESU\Tank_Torispherical-head_with_nozzle\Step_0\sub_001.r2fesu]

File Edit Properties Results Documentation View Options Window Help

F1 for Help | PA=0.0bar TA=0°C | 0, 0, 0

Input | Model | Result

Txt | Txt | Txt | Bmp | Meta file | HP GL

Properties cone

Name: S2 | Jacket: J2 | P1: P1 | P2: P3

Difference coordinates [mm]

DX= 0 | DY= 0 | DZ= -645.00019 | Length 645.00019

Type

- (•) centric
- ( ) excentric
- ( ) elliptic

local coordinate system

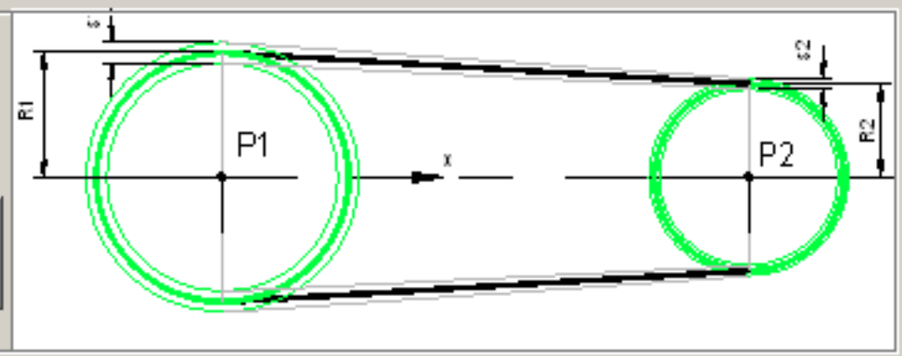

Material: ST35.8

Dimensions [mm]

(•) Insert mean radius ( ) Insert outer diameter

Point	Outer diameter	Mean radius	Wall thickness
P1: P1	Da1= 168.3	R1= 81.9	S1= 4.5
P2: P3	Da2= 168.3	R2= 81.9	S2= 4.5
	Corrosion 0		Minus mill tolerance 0.5625

Cross section definition for elliptic cones

Plane	Syp	Szp	Sym	Szm	Ry	Rz

New | Edit | Delete

Distribution

in axial direction 15 elements | in circumferential direction 25 elements

Progression

Click here

...n in circumferential direction is valid for ...f the jacket)

OK | Cancel | ...sider internal pressure [x]

Calculation output | Output of storing, loading ...

11:16:21 END FESU Total Time dt= 0.4

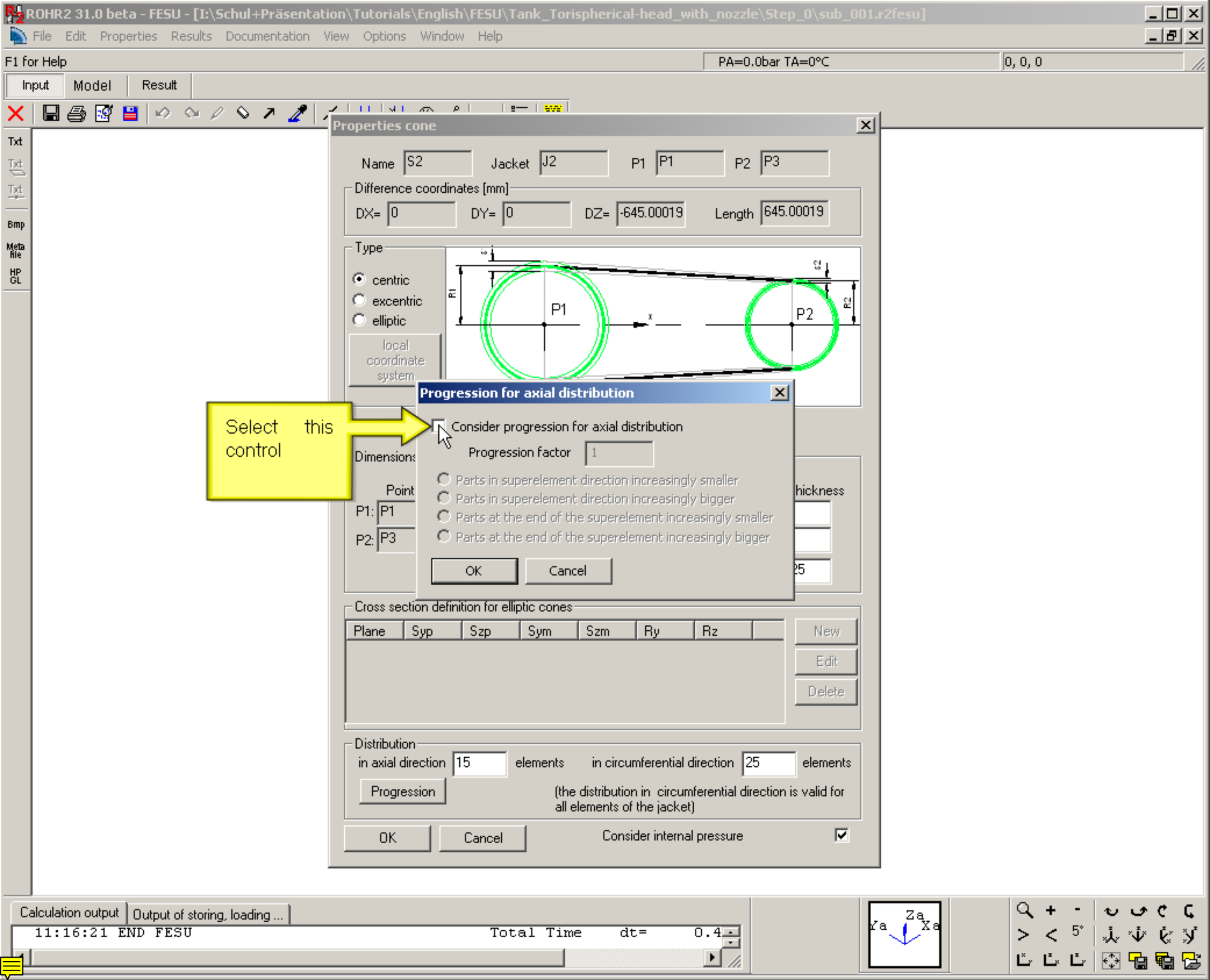
ROHR2 31.0 beta - FESU - [I:\Schul+Präsentation\Tutorials\English\FESU\Tank_Torispherical-head_with_nozzle\Step_0\sub_001.r2fesu]
File Edit Properties Results Documentation View Options Window Help
F1 for Help
PA=0.0bar TA=0°C
0, 0, 0
Input Model Result
Properties cone
Name S2 Jacket J2 P1 P1 P2 P3
Difference coordinates [mm]
DX= 0 DY= 0 DZ= -645.00019 Length 645.00019
Type
centric
excentric
elliptic
local coordinate system
P1
P2
Select this control
Progression for axial distribution
Consider progression for axial distribution
Progression factor 1
Parts in superelement direction increasingly smaller
Parts in superelement direction increasingly bigger
Parts at the end of the superelement increasingly smaller
Parts at the end of the superelement increasingly bigger
OK Cancel
Dimensions
Point
P1: P1
P2: P3
Cross section definition for elliptic cones
Plane Syp Szp Sym Szm Ry Rz
New
Edit
Delete
Distribution
in axial direction 15 elements in circumferential direction 25 elements
Progression
(the distribution in circumferential direction is valid for all elements of the jacket)
OK Cancel
Consider internal pressure
Calculation output
Output of storing, loading ...
11:16:21 END FESU Total Time dt= 0.4

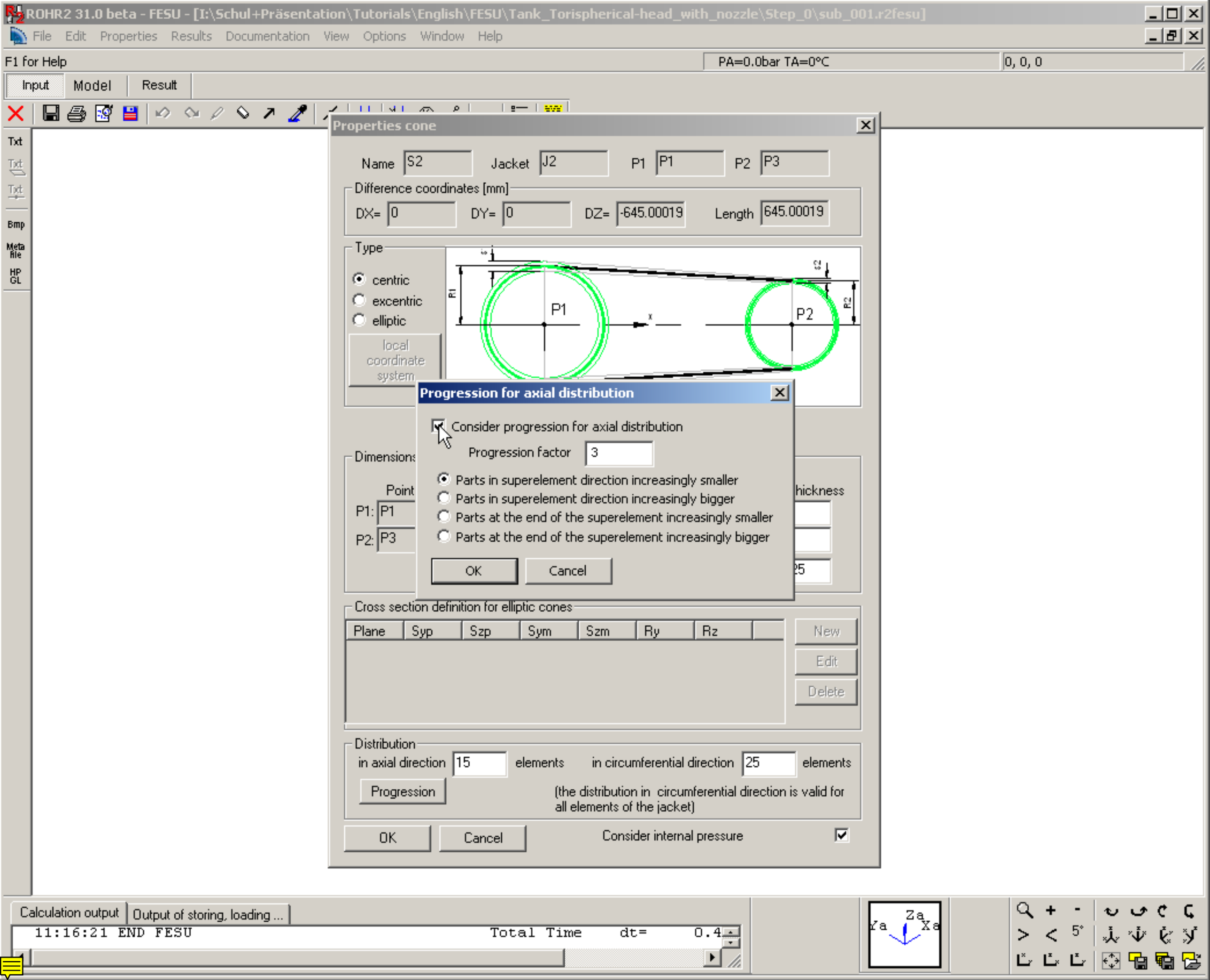
ROHR2 31.0 beta - FESU - [I:\Schul+Präsentation\Tutorials\English\FESU\Tank_Torispherical-head_with_nozzle\Step_0\sub_001.r2fesu]
File Edit Properties Results Documentation View Options Window Help
F1 for Help
PA=0.0bar TA=0°C
0, 0, 0
Input Model Result
Properties cone
Name S2 Jacket J2 P1 P1 P2 P3
Difference coordinates [mm]
DX= 0 DY= 0 DZ= -645.00019 Length 645.00019
Type
centric
excentric
elliptic
local coordinate system
P1
P2
Progression for axial distribution
Consider progression for axial distribution
Progression factor 3
Parts in superelement direction increasingly smaller
Parts in superelement direction increasingly bigger
Parts at the end of the superelement increasingly smaller
Parts at the end of the superelement increasingly bigger
OK Cancel
Dimensions
Point
P1: P1
P2: P3
Cross section definition for elliptic cones
Plane Syp Szp Sym Szm Ry Rz
New
Edit
Delete
Distribution
in axial direction 15 elements in circumferential direction 25 elements
Progression
(the distribution in circumferential direction is valid for all elements of the jacket)
OK Cancel
Consider internal pressure
Calculation output
Output of storing, loading ...
11:16:21 END FESU Total Time dt= 0.4

ROHR2 31.0 beta - FESU - [I:\Schul+Präsentation\Tutorials\English\FESU\Tank_Torispherical-head_with_nozzle\Step_0\sub_001.r2fesu]

File Edit Properties Results Documentation View Options Window Help

F1 for Help | PA=0.0bar TA=0°C | 0, 0, 0

Input | Model | Result

Txt | Txt | Txt | Bmp | Meta file | HP GL

Properties cone

Name S2 | Jacket J2 | P1 P1 | P2 P3

Difference coordinates [mm]

DX= 0 | DY= 0 | DZ= -645.00019 | Length 645.00019

Type

- centric
- excentric
- elliptic

local coordinate system

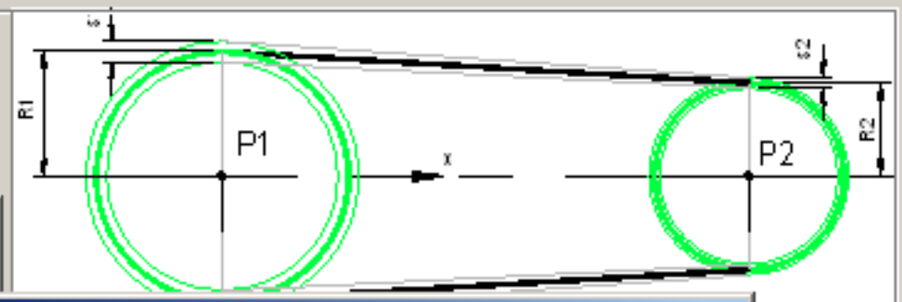

Progression for axial distribution

Consider progression for axial distribution

Progression factor 10

- Parts in superelement direction increasingly smaller
- Parts in superelement direction increasingly bigger
- Parts at the end of the superelement increasingly smaller
- Parts at the end of the superelement increasingly bigger

OK | Cancel

Change the progression factor to 10

Dimensions

Point

P1: P1

P2: P3

Cross section definition for elliptic cones

Plane	Syp	Szp	Sym	Szm	Ry	Rz	

New | Edit | Delete

Distribution

in axial direction 15 elements | in circumferential direction 25 elements

Progression

(the distribution in circumferential direction is valid for all elements of the jacket)

OK | Cancel | Consider internal pressure

Calculation output | Output of storing, loading ...

```
11:16:21 END FESU                    Total Time    dt=      0.4
```

Za Ya Xa

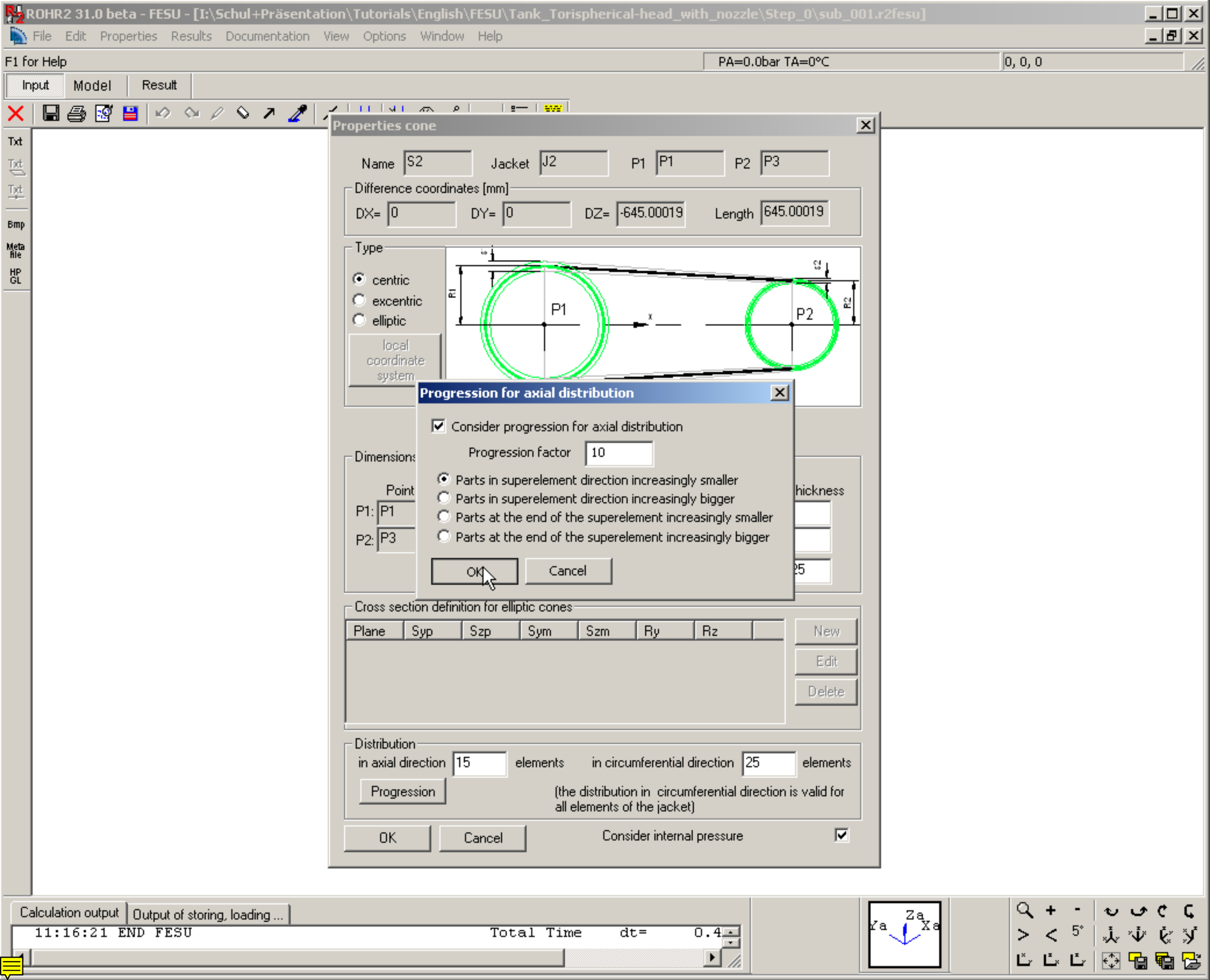
ROHR2 31.0 beta - FESU - [I:\Schul+Präsentation\Tutorials\English\FESU\Tank_Torispherical-head_with_nozzle\Step_0\sub_001.r2fesu]
File Edit Properties Results Documentation View Options Window Help
F1 for Help
PA=0.0bar TA=0°C
0, 0, 0
Input Model Result
Properties cone
Name S2 Jacket J2 P1 P1 P2 P3
Difference coordinates [mm]
DX= 0 DY= 0 DZ= -645.00019 Length 645.00019
Type
centric
excentric
elliptic
local coordinate system
P1
P2
Progression for axial distribution
Consider progression for axial distribution
Progression factor 10
Parts in superelement direction increasingly smaller
Parts in superelement direction increasingly bigger
Parts at the end of the superelement increasingly smaller
Parts at the end of the superelement increasingly bigger
OK
Cancel
Dimensions
Point
P1: P1
P2: P3
Cross section definition for elliptic cones
Plane Syp Szp Sym Szm Ry Rz
New
Edit
Delete
Distribution
in axial direction 15 elements
in circumferential direction 25 elements
Progression
(the distribution in circumferential direction is valid for all elements of the jacket)
OK
Cancel
Consider internal pressure
Calculation output
Output of storing, loading ...
11:16:21 END FESU Total Time dt= 0.4

ROHR2 31.0 beta - FESU - [I:\Schul+Präsentation\Tutorials\English\FESU\Tank_Torispherical-head_with_nozzle\Step_0\sub_001.r2fesu]

File Edit Properties Results Documentation View Options Window Help

F1 for Help | PA=0.0bar TA=0°C | 0, 0, 0

Input | Model | Result

Txt | Txt | Txt | Bmp | Meta file | HP GL

Properties cone

Name: S2 | Jacket: J2 | P1: P1 | P2: P3

Difference coordinates [mm]

DX= 0 | DY= 0 | DZ= -645.00019 | Length 645.00019

Type

- centric
- excentric
- elliptic

local coordinate system

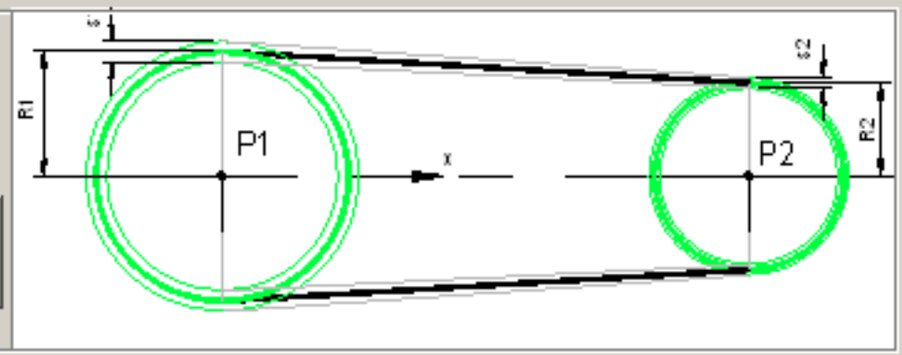

Material: ST35.8

Dimensions [mm]

- Insert outer diameter
- Insert mean radius

Point	Outer diameter	Mean radius	Wall thickness
P1: P1	Da1= 168.3	R1= 81.9	S1= 4.5
P2: P3	Da2= 168.3	R2= 81.9	S2= 4.5

Corrosion: 0 | Minus mill tolerance: 0.5625

Cross section definition for elliptic cones

Plane	Syp	Szp	Sym	Szm	Ry	Rz

New | Edit | Delete

Distribution

in axial direction: 15 elements | in circumferential direction: 25 elements

Progression

The color has been changed. Progrssion is now considered

OK | Cancel

Calculation output | Output of storing, loading ...

11:16:21 END FESU Total Time dt= 0.4

ROHR2 31.0 beta - FESU - [I:\Schul+Präsentation\Tutorials\English\FESU\Tank_Torispherical-head_with_nozzle\Step_0\sub_001.r2fesu]

File Edit Properties Results Documentation View Options Window Help

F1 for Help | PA=0.0bar TA=0°C | 0, 0, 0

Input | Model | Result

Txt
Txt
Txt
Bmp
Meta file
HP GL

Properties cone

Name: S2 | Jacket: J2 | P1: P1 | P2: P3

Difference coordinates [mm]

DX= 0 | DY= 0 | DZ= -645.00019 | Length 645.00019

Type

- centric
- excentric
- elliptic

local coordinate system

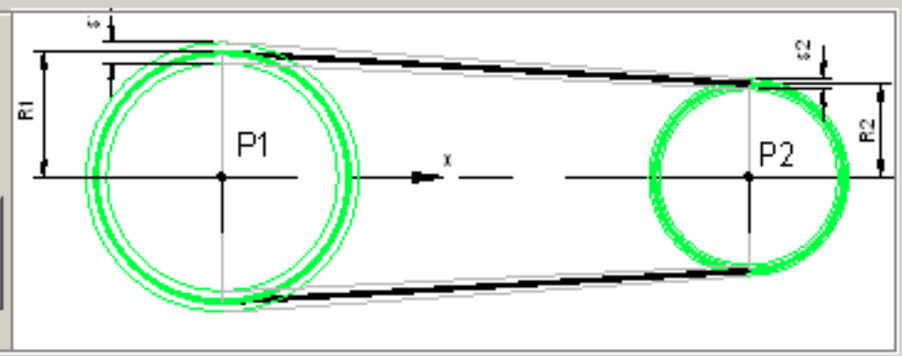

Material: ST35.8

Dimensions [mm]

Insert outer diameter | Insert mean radius

Point	Outer diameter	Mean radius	Wall thickness
P1: P1	Da1= 168.3	R1= 81.9	S1= 4.5
P2: P3	Da2= 168.3	R2= 81.9	S2= 4.5

Corrosion: 0 | Minus mill tolerance: 0.5625

Cross section definition for elliptic cones

Plane	Syp	Szp	Sym	Szm	Ry	Rz

New | Edit | Delete

Distribution

in axial direction: 15 elements | in circumferential direction: 25 elements

Progression

(the distribution in circumferential direction is valid for all elements of the jacket)

OK | Cancel | Consider internal pressure

Calculation output | Output of storing, loading ...

```
11:16:21 END FESU                    Total Time    dt=      0.4
```

ROHR2 31.0 beta - FESU - [I:\Schul+Präsentation\Tutorials\English\FESU\Tank_Torispherical-head_with_nozzle\Step_0\sub_001.r2fesu]

File Edit Properties Results Documentation View Options Window Help

F1 for Help | PA=0.0bar TA=0°C | 0, 0, 0

Input | Model | Result

Txt
Txt
Txt
Bmp
Meta file
HP GL

Properties cone

Name: S2 | Jacket: J2 | P1: P1 | P2: P3

Difference coordinates [mm]

DX= 0 | DY= 0 | DZ= -645.00019 | Length 645.00019

Type

- centric
- excentric
- elliptic

local coordinate system

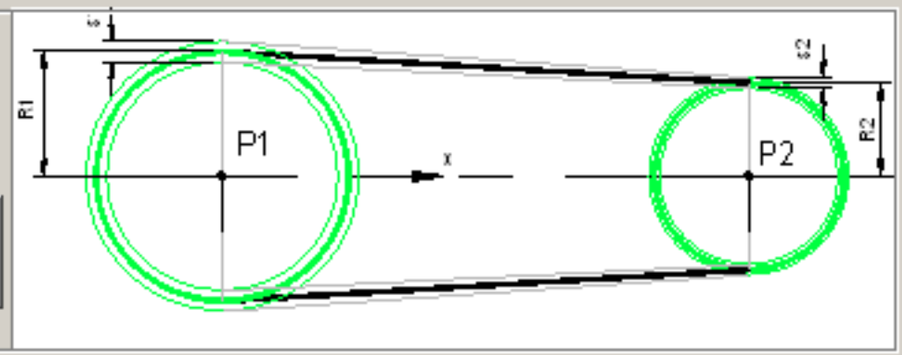

Material: ST35.8

Dimensions [mm]

- Insert outer diameter
- Insert mean radius

Point	Outer diameter	Mean radius	Wall thickness
P1: P1	Da1= 168.3	R1= 81.9	S1= 4.5
P2: P3	Da2= 168.3	R2= 81.9	S2= 4.5

Corrosion: 0 | Minus mill tolerance: 0.5625

Cross section definition for elliptic cones

Plane	Syp	Szp	Sym	Szm	Ry	Rz

New | Edit | Delete

Distribution

in axial direction 15 elements | in circumferential direction 25 elements

Progression

(the distribution in circumferential direction is valid for all elements of the jacket)

OK | Cancel | Consider internal pressure

Calculation output | Output of storing, loading ...

11:16:21 END FESU Total Time dt= 0.4

ROHR2 31.0 beta - FESU - [I:\Schul+Präsentation\Tutorials\English\FESU\Tank_Torispherical-head_with_nozzle\Step_0\sub_001.r2fesu*]

File Edit Properties Results Documentation View Options Window Help

F1 for Help | PA=0.0bar TA=0°C | 0, 0, 0

Input | Model | Result

Txt
Txt
Txt
Bmp
Meta file
HP GL

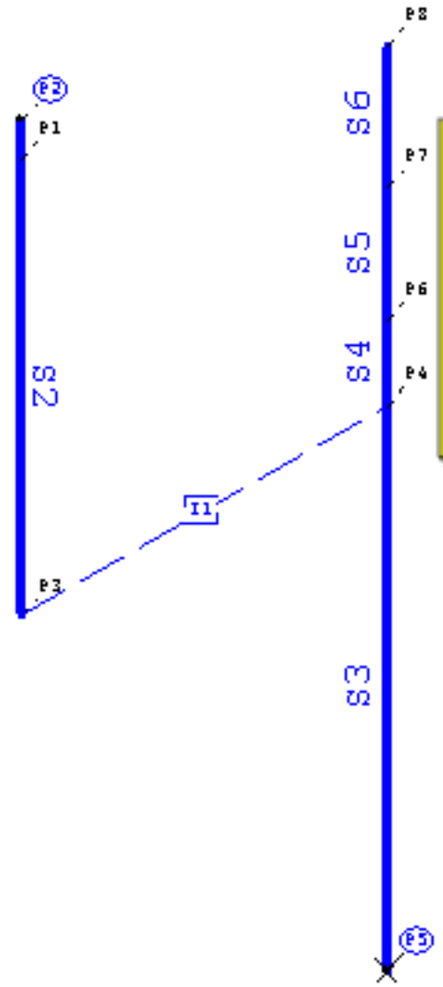

The rest of the superelements will be editing at the same way.

Calculation output | Output of storing, loading ...

11:16:21 END FESU Total Time dt= 0.4

Za Ya Xa

5°

ROHR2 31.0 beta - FESU - [I:\Schul+Präsentation\Tutorials\English\FESU\Tank_Torispherical-head_with_nozzle\Step_0\sub_001.r2fesu*]

File Edit Properties Results Documentation View Options Window Help

F1 for Help | PA=0.0bar TA=0°C | 0, 0, 0

Input | Model | Result

Txt
Txt
Txt
Bmp
Meta file
HP GL

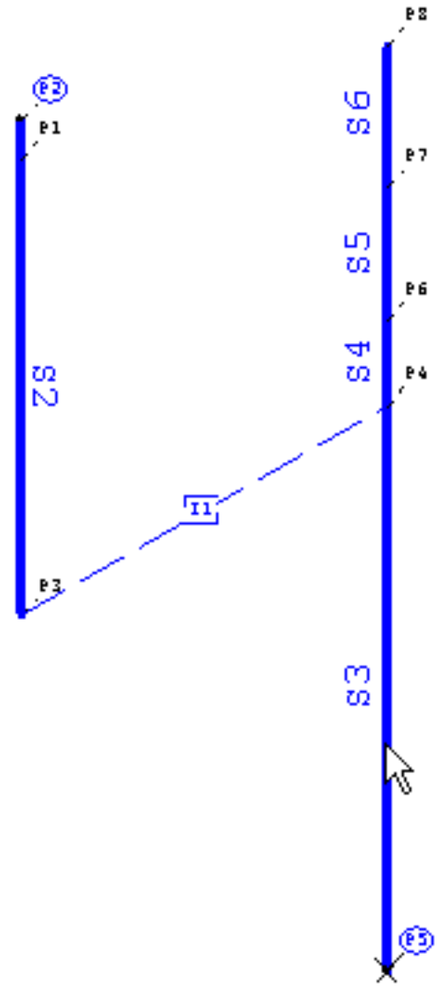

Calculation output | Output of storing, loading ...

11:16:21 END FESU Total Time dt= 0.4

Za
Ya
Xa

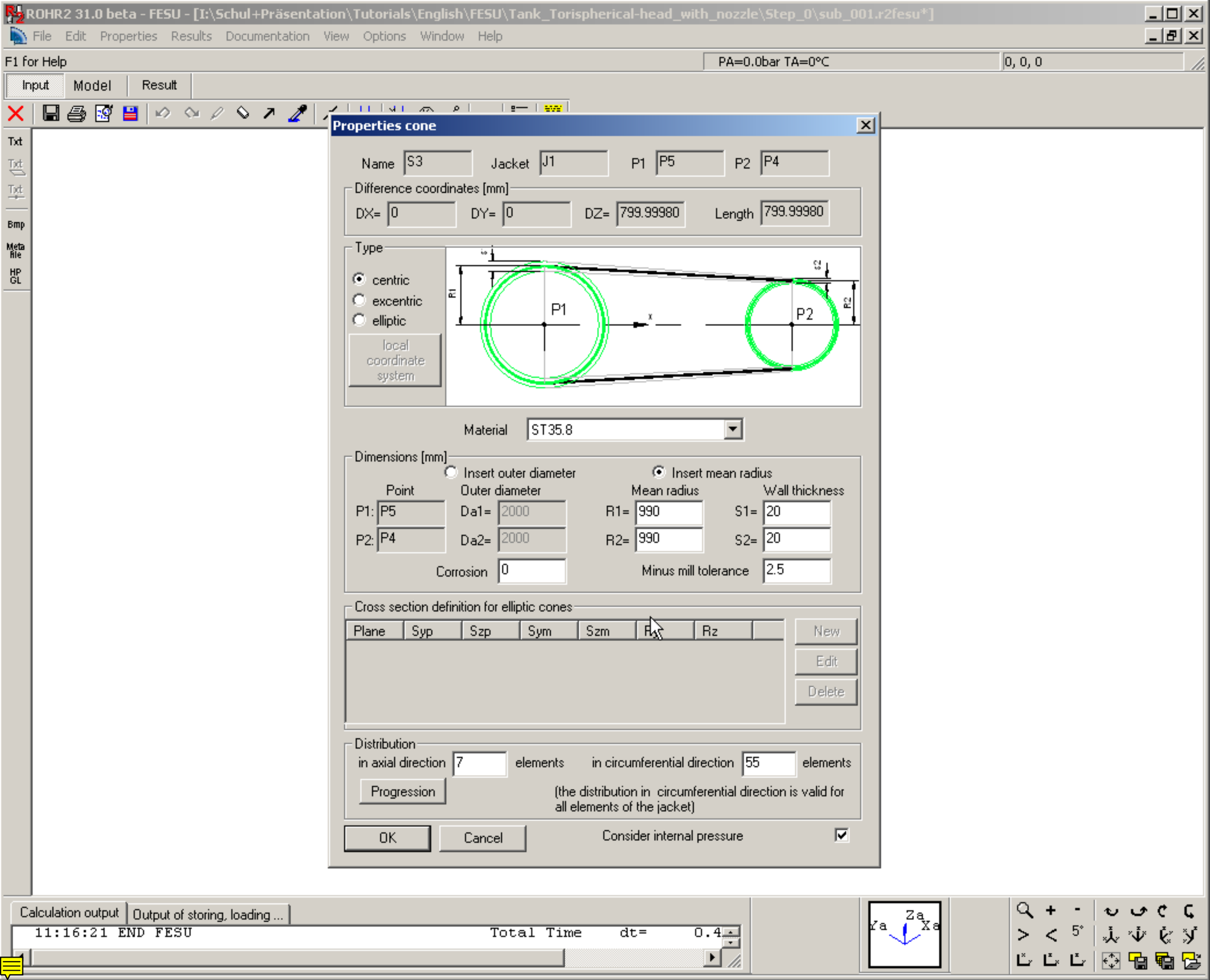
ROHR2 31.0 beta - FESU - [I:\Schul+Präsentation\Tutorials\English\FESU\Tank_Torispherical-head_with_nozzle\Step_0\sub_001.r2fesu*]
File Edit Properties Results Documentation View Options Window Help
F1 for Help
PA=0.0bar TA=0°C
0, 0, 0
Input Model Result
Properties cone
Name S3 Jacket J1 P1 P5 P2 P4
Difference coordinates [mm]
DX= 0 DY= 0 DZ= 799.99980 Length 799.99980
Type
centric
excentric
elliptic
local coordinate system
P1
P2
R1
R2
Material ST35.8
Dimensions [mm]
Insert outer diameter
Insert mean radius
Point
Outer diameter
Mean radius
Wall thickness
P1: P5 Da1= 2000 R1= 990 S1= 20
P2: P4 Da2= 2000 R2= 990 S2= 20
Corrosion 0
Minus mill tolerance 2.5
Cross section definition for elliptic cones
Plane Syp Szp Sym Szm Rz
New
Edit
Delete
Distribution
in axial direction 7 elements
in circumferential direction 55 elements
Progression
(the distribution in circumferential direction is valid for all elements of the jacket)
OK
Cancel
Consider internal pressure
Calculation output
Output of storing, loading ...
11:16:21 END FESU Total Time dt= 0.4

ROHR2 31.0 beta - FESU - [I:\Schul+Präsentation\Tutorials\English\FESU\Tank_Torispherical-head_with_nozzle\Step_0\sub_001.r2fesu*]

File Edit Properties Results Documentation View Options Window Help

F1 for Help | PA=0.0bar TA=0°C | 0, 0, 0

Input | Model | Result

Txt | Txt | Txt | Bmp | Meta file | HP GL

Properties cone

Name: S3 | Jacket: J1 | P1: P5 | P2: P4

Difference coordinates [mm]

DX= 0 | DY= 0 | DZ= 799.99980 | Length 799.99980

Type

- (•) centric
- ( ) excentric
- ( ) elliptic

local coordinate system

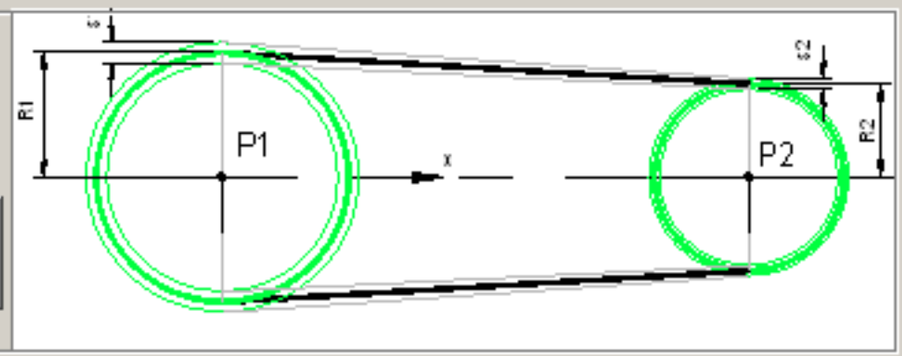

Material: ST35.8

Dimensions [mm]

(•) Insert outer diameter ( ) Insert mean radius

	Point	Outer diameter		Mean radius		Wall thickness
P1:	P5	Da1=	2000	R1=	990	S1= 20
P2:	P4	Da2=	2000	R2=	990	S2= 20

Corrosion: 0 | Minus mill tolerance: 2.5

Cross section definition for elliptic cones

Plane	Syp	Szp	Sym	Szm	Ry	Rz

New | Edit | Delete

Distribution

in axial direction: 15 elements | in circumferential direction: 55 elements

Progression

(the distribution in circumferential direction is valid for all elements of the jacket)

OK | Cancel | Consider internal pressure [x]

Calculation output | Output of storing, loading ...

```
11:16:21 END FESU                    Total Time    dt=      0.4
```

ROHR2 31.0 beta - FESU - [I:\Schul+Präsentation\Tutorials\English\FESU\Tank_Torispherical-head_with_nozzle\Step_0\sub_001.r2fesu*]

File Edit Properties Results Documentation View Options Window Help

F1 for Help | PA=0.0bar TA=0°C | 0, 0, 0

Input Model Result

Txt Txt Txt Bmp Meta file HP GL

Properties cone

Name S3 Jacket J1 P1 P5 P2 P4

Difference coordinates [mm]

DX= 0 DY= 0 DZ= 799.99980 Length 799.99980

Type

- centric
- excentric
- elliptic

local coordinate system

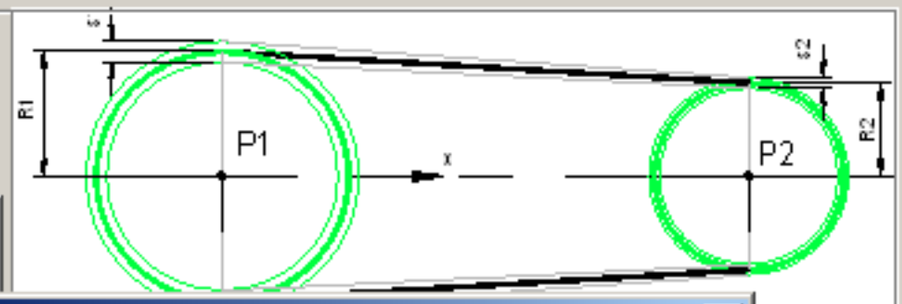

Progression for axial distribution

Consider progression for axial distribution

Progression factor 1

- Parts in superelement direction increasingly smaller
- Parts in superelement direction increasingly bigger
- Parts at the end of the superelement increasingly smaller
- Parts at the end of the superelement increasingly bigger

OK Cancel

Dimensions

Point

P1: P5

P2: P4

hickness

Cross section definition for elliptic cones

Plane	Syp	Szp	Sym	Szm	Ry	Rz	

New Edit Delete

Distribution

in axial direction 15 elements in circumferential direction 55 elements

Progression

(the distribution in circumferential direction is valid for all elements of the jacket)

OK Cancel Consider internal pressure

Calculation output | Output of storing, loading ...

```
11:16:21 END FESU                    Total Time    dt=      0.4
```

Za Ya Xa

ROHR2 31.0 beta - FESU - [I:\Schul+Präsentation\Tutorials\English\FESU\Tank_Torispherical-head_with_nozzle\Step_0\sub_001.r2fesu*]

File Edit Properties Results Documentation View Options Window Help

F1 for Help | PA=0.0bar TA=0°C | 0, 0, 0

Input Model Result

Txt Txt Txt Bmp Meta file HP GL

Properties cone

Name S3 Jacket J1 P1 P5 P2 P4

Difference coordinates [mm]

DX= 0 DY= 0 DZ= 799.99980 Length 799.99980

Type

- centric
- excentric
- elliptic

local coordinate system

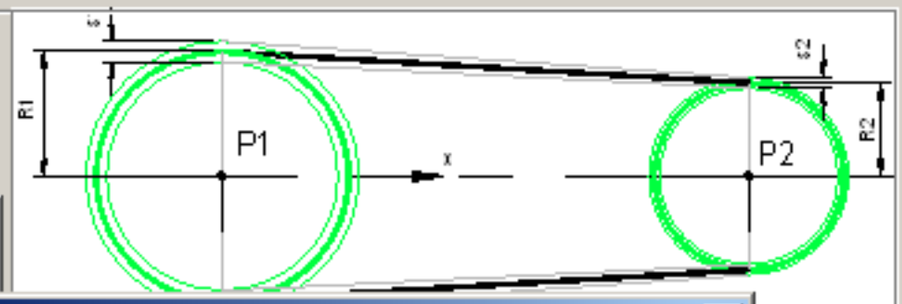

Progression for axial distribution

Consider progression for axial distribution

Progression factor 3

- Parts in superelement direction increasingly smaller
- Parts in superelement direction increasingly bigger
- Parts at the end of the superelement increasingly smaller
- Parts at the end of the superelement increasingly bigger

OK Cancel

Dimensions

Point

P1: P5

P2: P4

hickness

Cross section definition for elliptic cones

Plane	Syp	Szp	Sym	Szm	Ry	Rz	

New Edit Delete

Distribution

in axial direction 15 elements in circumferential direction 55 elements

Progression

(the distribution in circumferential direction is valid for all elements of the jacket)

OK Cancel Consider internal pressure

Calculation output | Output of storing, loading ...

11:16:21 END FESU Total Time dt= 0.4

ROHR2 31.0 beta - FESU - [I:\Schul+Präsentation\Tutorials\English\FESU\Tank_Torispherical-head_with_nozzle\Step_0\sub_001.r2fesu*]

File Edit Properties Results Documentation View Options Window Help

F1 for Help | PA=0.0bar TA=0°C | 0, 0, 0

Input | Model | Result

Txt | Txt | Txt | Bmp | Meta file | HP GL

Properties cone

Name S3 | Jacket J1 | P1 P5 | P2 P4

Difference coordinates [mm]

DX= 0 | DY= 0 | DZ= 799.99980 | Length 799.99980

Type

- centric
- excentric
- elliptic

local coordinate system

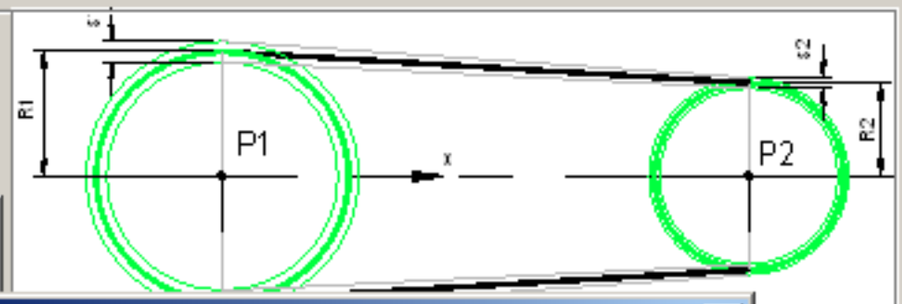

Progression for axial distribution

Consider progression for axial distribution

Progression factor 3

- Parts in superelement direction increasingly smaller
- Parts in superelement direction increasingly bigger
- Parts at the end of the superelement increasingly smaller
- Parts at the end of the superelement increasingly bigger

OK | Cancel

Dimensions

Point

P1: P5

P2: P4

hickness

Cross section definition for elliptic cones

Plane	Syp	Szp	Sym	Szm	Ry	Rz	

New | Edit | Delete

Distribution

in axial direction 15 elements | in circumferential direction 55 elements

Progression

(the distribution in circumferential direction is valid for all elements of the jacket)

OK | Cancel | Consider internal pressure

Calculation output | Output of storing, loading ...

```
11:16:21 END FESU                    Total Time    dt=      0.4
```

ROHR2 31.0 beta - FESU - [I:\Schul+Präsentation\Tutorials\English\FESU\Tank_Torispherical-head_with_nozzle\Step_0\sub_001.r2fesu*]

File Edit Properties Results Documentation View Options Window Help

F1 for Help | PA=0.0bar TA=0°C | 0, 0, 0

Input Model Result

Txt Txt Txt Bmp Meta file HP GL

Properties cone

Name S3 Jacket J1 P1 P5 P2 P4

Difference coordinates [mm]

DX= 0 DY= 0 DZ= 799.99980 Length 799.99980

Type

- centric
- excentric
- elliptic

local coordinate system

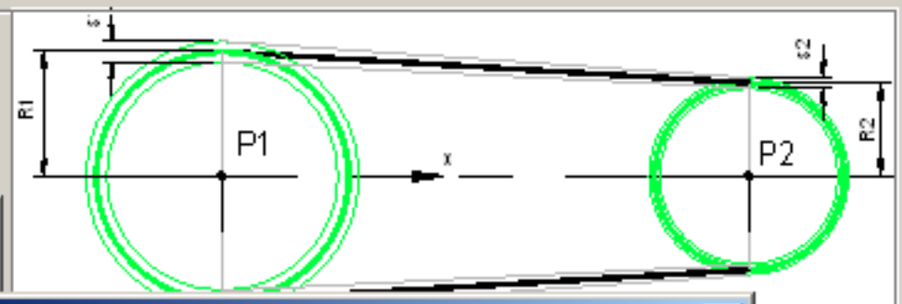

Progression for axial distribution

Consider progression for axial distribution

Progression factor 6

- Parts in superelement direction increasingly smaller
- Parts in superelement direction increasingly bigger
- Parts at the end of the superelement increasingly smaller
- Parts at the end of the superelement increasingly bigger

OK Cancel

Dimensions

Point

P1: P5

P2: P4

hickness

Cross section definition for elliptic cones

Plane	Syp	Szp	Sym	Szm	Ry	Rz	

New Edit Delete

Distribution

in axial direction 15 elements in circumferential direction 55 elements

Progression

(the distribution in circumferential direction is valid for all elements of the jacket)

OK Cancel Consider internal pressure

Calculation output | Output of storing, loading ...

11:16:21 END FESU Total Time dt= 0.4

ROHR2 31.0 beta - FESU - [I:\Schul+Präsentation\Tutorials\English\FESU\Tank_Torispherical-head_with_nozzle\Step_0\sub_001.r2fesu*]

File Edit Properties Results Documentation View Options Window Help

F1 for Help | PA=0.0bar TA=0°C | 0, 0, 0

Input | Model | Result

Txt
Txt
Txt
Bmp
Meta file
HP GL

Properties cone

Name: S3 | Jacket: J1 | P1: P5 | P2: P4

Difference coordinates [mm]

DX= 0 | DY= 0 | DZ= 799.99980 | Length 799.99980

Type

- centric
- excentric
- elliptic

local coordinate system

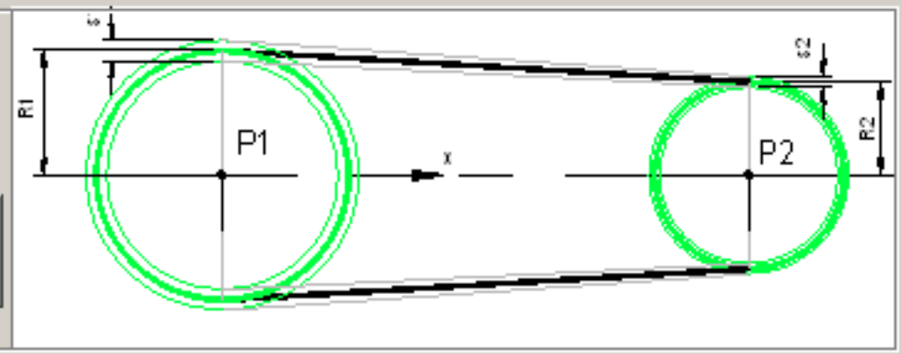

Material: ST35.8

Dimensions [mm]

- Insert outer diameter
- Insert mean radius

	Point	Outer diameter	Mean radius	Wall thickness
P1:	P5	Da1= 2000	R1= 990	S1= 20
P2:	P4	2000	990	20
				2.5

Cross section definition for elliptic cones

Plane	Syp	Szp	Sym	Szm	Ry	Rz

New | Edit | Delete

Distribution

in axial direction 15 elements | in circumferential direction 55 elements

Progression

(the distribution in circumferential direction is valid for all elements of the jacket)

OK | Cancel | Consider internal pressure

Calculation output | Output of storing, loading ...

11:16:21 END FESU Total Time dt= 0.4

Za Ya Xa

ROHR2 31.0 beta - FESU - [I:\Schul+Präsentation\Tutorials\English\FESU\Tank_Torispherical-head_with_nozzle\Step_0\sub_001.r2fesu*]

File Edit Properties Results Documentation View Options Window Help

F1 for Help | PA=0.0bar TA=0°C | 0, 0, 0

Input | Model | Result

Txt | Txt | Txt | Bmp | Meta file | HP GL

Properties cone

Name: S3 | Jacket: J1 | P1: P5 | P2: P4

Difference coordinates [mm]

DX= 0 | DY= 0 | DZ= 799.99980 | Length 799.99980

Type

- (•) centric
- ( ) excentric
- ( ) elliptic

local coordinate system

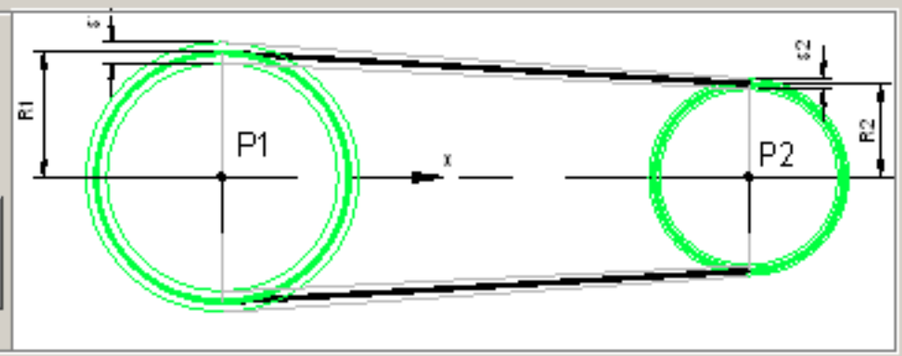

Material: ST35.8

Dimensions [mm]

(•) Insert outer diameter ( ) Insert mean radius

	Point	Outer diameter		Mean radius		Wall thickness
P1:	P5	Da1=	2000	R1=	990	S1= 20
P2:	P4	Da2=	2000	R2=	990	S2= 20

Corrosion: 0 | Minus mill tolerance: 2.5

Cross section definition for elliptic cones

Plane	Syp	Szp	Sym	Szm	Ry	Rz

New | Edit | Delete

Distribution

in axial direction: 15 elements | in circumferential direction: 55 elements

Progression

(the distribution in circumferential direction is valid for all elements of the jacket)

OK | Cancel | Consider internal pressure [x]

Calculation output | Output of storing, loading ...

```
11:16:21 END FESU                    Total Time    dt=      0.4
```

ROHR2 31.0 beta - FESU - [I:\Schul+Präsentation\Tutorials\English\FESU\Tank_Torispherical-head_with_nozzle\Step_0\sub_001.r2fesu*]

File Edit Properties Results Documentation View Options Window Help

F1 for Help | PA=0.0bar TA=0°C | 0, 0, 0

Input | Model | Result

Txt
Txt
Txt
Bmp
Meta file
HP GL

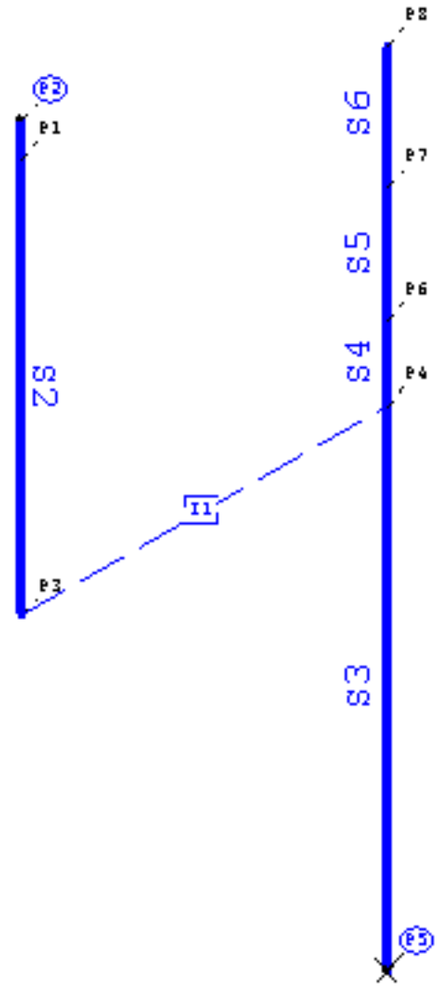

Calculation output | Output of storing, loading ...

11:16:21 END FESU Total Time dt= 0.4

Za
Ya
Xa

ROHR2 31.0 beta - FESU - [I:\Schul+Präsentation\Tutorials\English\FESU\Tank_Torispherical-head_with_nozzle\Step_0\sub_001.r2fesu*]

File Edit Properties Results Documentation View Options Window Help

F1 for Help | PA=0.0bar TA=0°C | 0, 0, 0

Input | Model | Result

Txt
Txt
Txt
Bmp
Meta file
HP GL

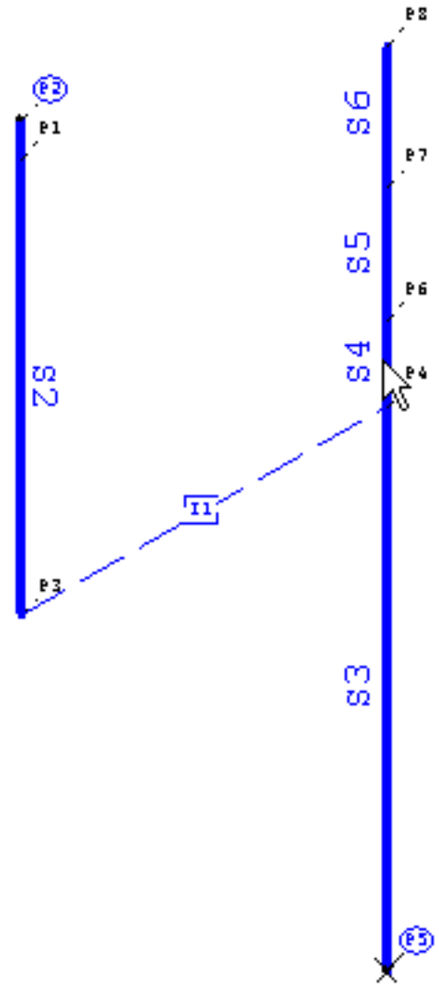

Calculation output | Output of storing, loading ...

11:16:21 END FESU Total Time dt= 0.4

Za
Ya
Xa

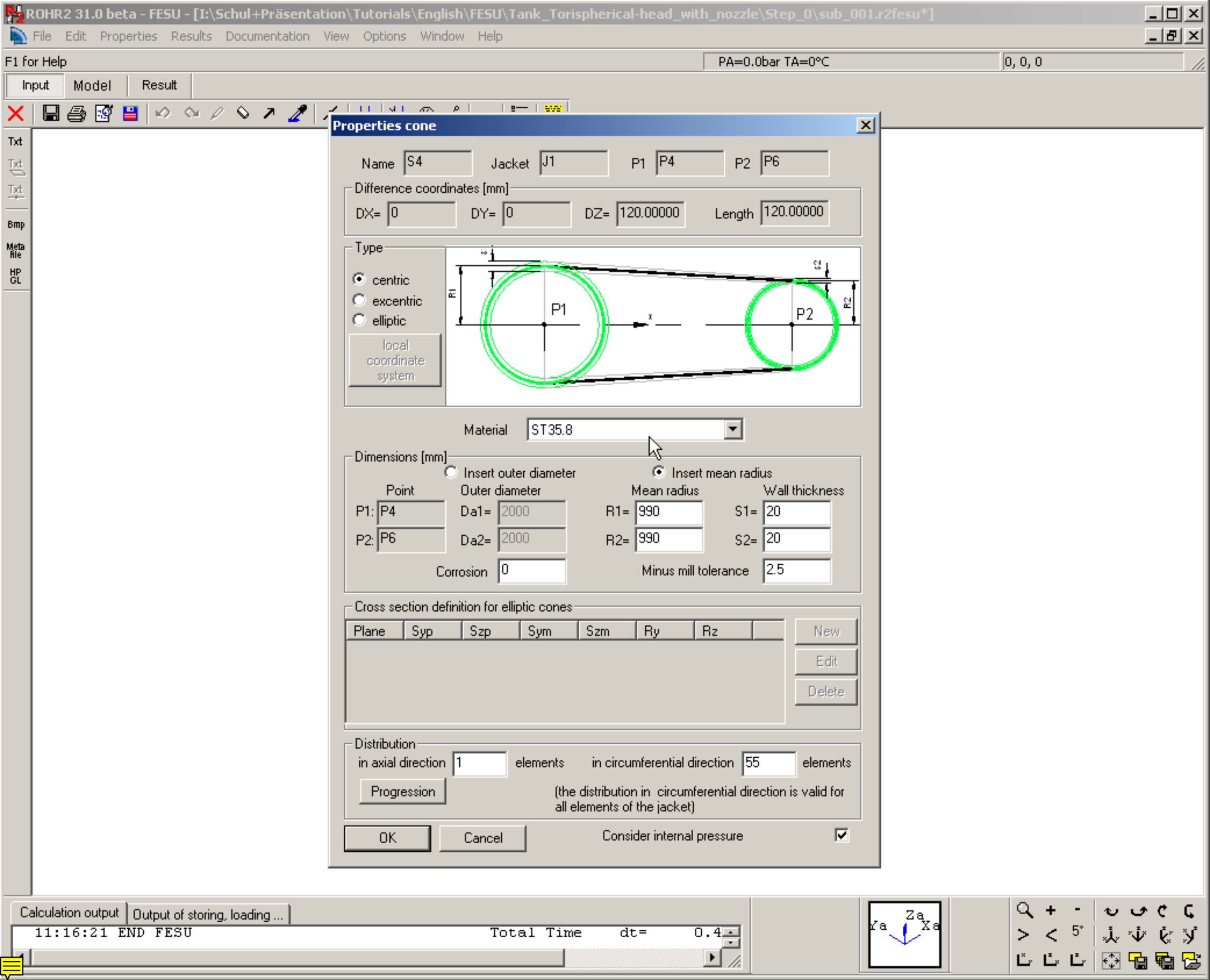
ROHR2 31.0 beta - FESU - [I:\Schul+Präsentation\Tutorials\English\FESU\Tank_Torispherical-head_with_nozzle\Step_0\sub_001.r2fesu*]
File Edit Properties Results Documentation View Options Window Help
F1 for Help
PA=0.0bar TA=0°C
0, 0, 0
Input Model Result
Properties cone
Name S4 Jacket J1 P1 P4 P2 P6
Difference coordinates [mm]
DX= 0 DY= 0 DZ= 120.00000 Length 120.00000
Type
centric
excentric
elliptic
local coordinate system
P1
P2
R1
R2
Material ST35.8
Dimensions [mm]
Insert outer diameter
Insert mean radius
Point Outer diameter Mean radius Wall thickness
P1: P4 Da1= 2000 R1= 990 S1= 20
P2: P6 Da2= 2000 R2= 990 S2= 20
Corrosion 0 Minus mill tolerance 2.5
Cross section definition for elliptic cones
Plane Syp Szp Sym Szm Ry Rz
New
Edit
Delete
Distribution
in axial direction 1 elements in circumferential direction 55 elements
Progression
(the distribution in circumferential direction is valid for all elements of the jacket)
OK Cancel Consider internal pressure
Calculation output
Output of storing, loading ...
11:16:21 END FESU Total Time dt= 0.4

ROHR2 31.0 beta - FESU - [I:\Schul+Präsentation\Tutorials\English\FESU\Tank_Torispherical-head_with_nozzle\Step_0\sub_001.r2fesu*]

File Edit Properties Results Documentation View Options Window Help

F1 for Help | PA=0.0bar TA=0°C | 0, 0, 0

Input | Model | Result

Txt
Txt
Txt
Bmp
Meta file
HP GL

Properties cone

Name: S4 | Jacket: J1 | P1: P4 | P2: P6

Difference coordinates [mm]

DX= 0 | DY= 0 | DZ= 120.00000 | Length 120.00000

Type

- centric
- excentric
- elliptic

local coordinate system

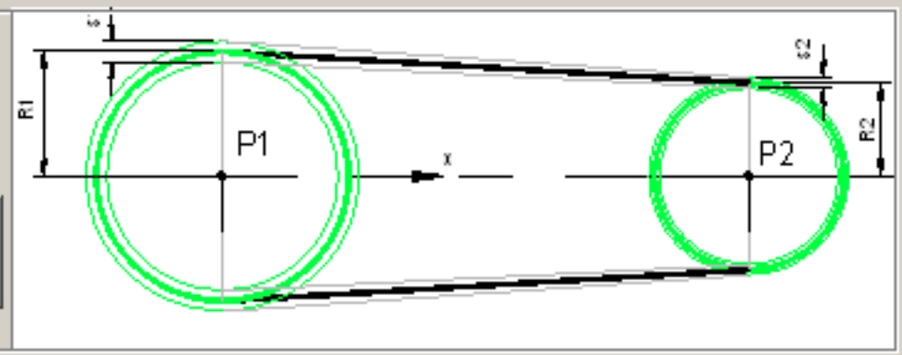

Material: ST35.8

Dimensions [mm]

- Insert outer diameter
- Insert mean radius

Point	Outer diameter	Mean radius	Wall thickness
P1: P4	Da1= 2000	R1= 990	S1= 20
P2: P6	Da2= 2000	R2= 990	S2= 20

Corrosion: 0 | Minus mill tolerance: 2.5

Cross section definition for elliptic cones

Plane	Syp	Szp	Sym	Szm	Ry	Rz

New | Edit | Delete

Distribution

in axial direction: 7 elements | in circumferential direction: 55 elements

Progression

(the distribution in circumferential direction is valid for all elements of the jacket)

OK | Cancel | Consider internal pressure

Calculation output | Output of storing, loading ...

11:16:21 END FESU Total Time dt= 0.4

ROHR2 31.0 beta - FESU - [I:\Schul+Präsentation\Tutorials\English\FESU\Tank_Torispherical-head_with_nozzle\Step_0\sub_001.r2fesu*]

File Edit Properties Results Documentation View Options Window Help

F1 for Help | PA=0.0bar TA=0°C | 0, 0, 0

Input | Model | Result

Txt
Txt
Txt
Bmp
Meta file
HP GL

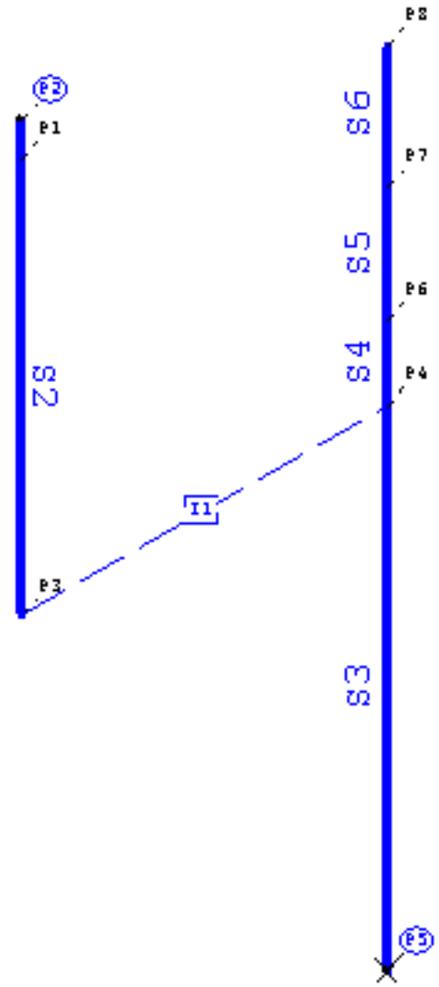

Calculation output | Output of storing, loading ...

11:16:21 END FESU Total Time dt= 0.4

Za
Ya
Xa

ROHR2 31.0 beta - FESU - [I:\Schul+Präsentation\Tutorials\English\FESU\Tank_Torispherical-head_with_nozzle\Step_0\sub_001.r2fesu*]

File Edit Properties Results Documentation View Options Window Help

F1 for Help | PA=0.0bar TA=0°C | 0, 0, 0

Input | Model | Result

Txt
Txt
Txt
Bmp
Meta file
HP GL

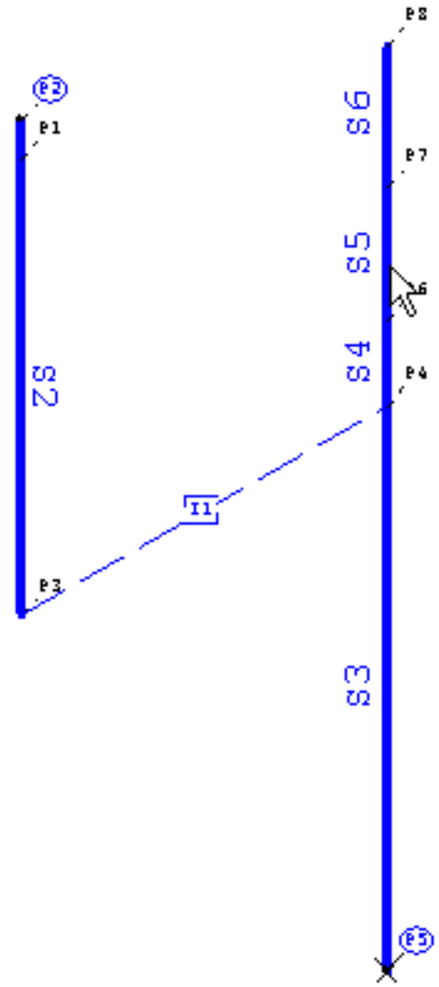

Calculation output | Output of storing, loading ...

11:16:21 END FESU Total Time dt= 0.4

Za
Ya
Xa

ROHR2 31.0 beta - FESU - [I:\Schul+Präsentation\Tutorials\English\FESU\Tank_Torispherical-head_with_nozzle\Step_0\sub_001.r2fesu*]

File Edit Properties Results Documentation View Options Window Help

F1 for Help | PA=0.0bar TA=0°C | 0, 0, 0

Input | Model | Result

Txt
Txt
Txt
Bmp
Meta file
HP GL

Properties torus

Name S5 Jacket J1 P1 P6 P2 P7

Difference coordinates [mm]

DX= 0 DY= 0 DZ= 188.76404 Length 188.76404

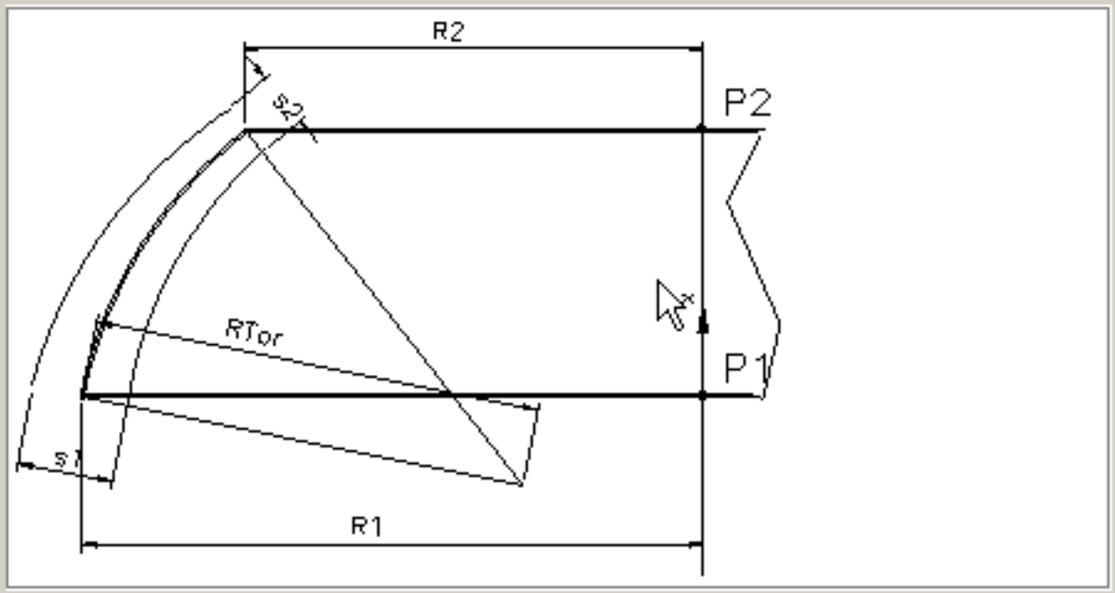

Material ST35.8

(•) convex ( ) conkav Torus radius (RTor) 210 mm

Dimensions [mm]

( ) Insert outer diameter (•) Insert mean radius

	Point	Outer diameter		Mean radius		Wall thickness
P1:	P6	Da1=	2000	R1=	990	S1= 20
P2:	P7	Da2=	1764.0449	R2=	872.02247	S2= 20
		Corrosion	0		Minus mill tolerance	2.5

Distribution

in axial direction 3 elements in circumferential direction 55 elements

Progression (the distribution in circumferential direction is valid for all elements of the jacket)

OK Cancel Consider internal pressure [x]

Calculation output | Output of storing, loading ...

```
11:16:21 END FESU                    Total Time    dt=      0.4
```

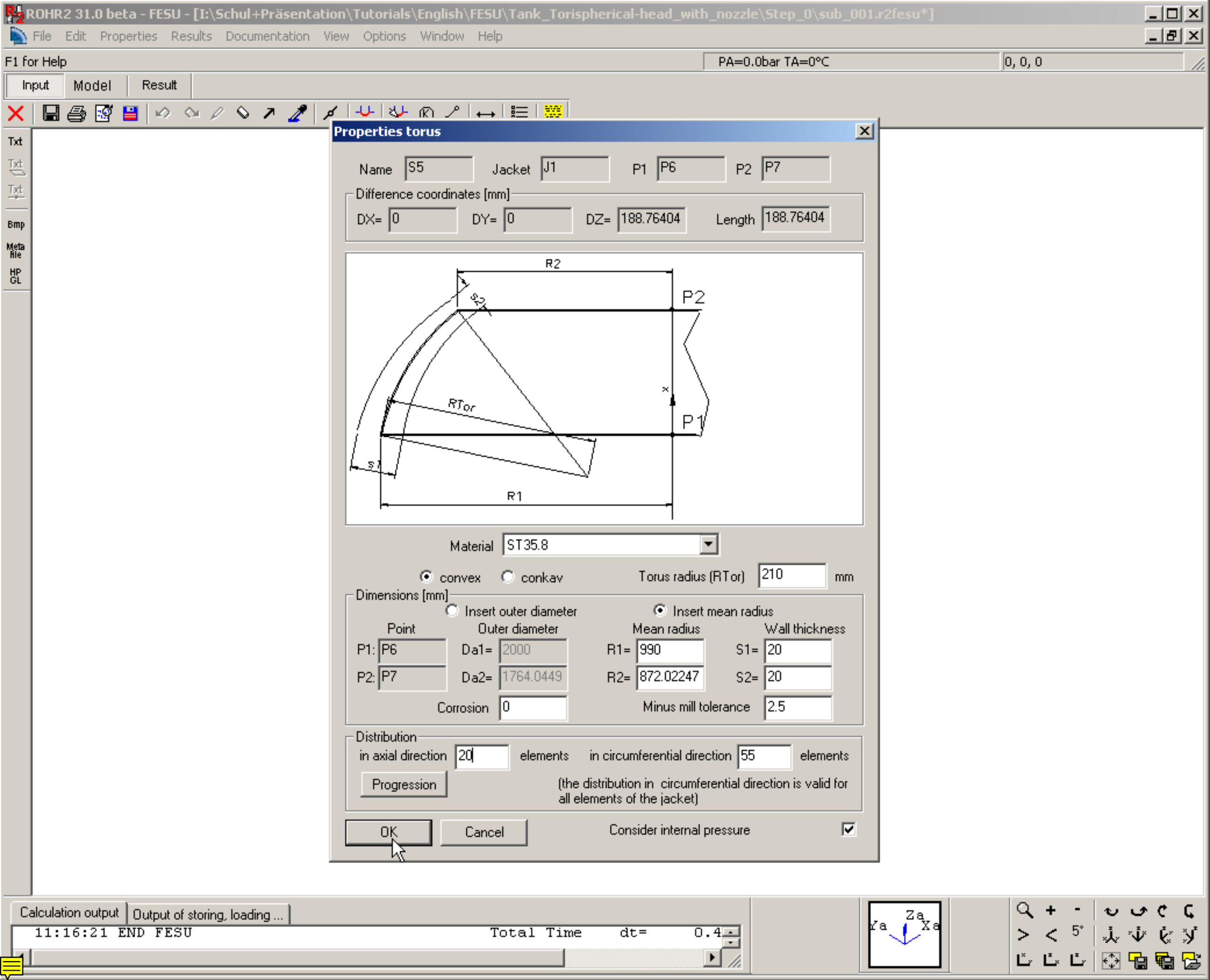
ROHR2 31.0 beta - FESU - [I:\Schul+Präsentation\Tutorials\English\FESU\Tank_Torispherical-head_with_nozzle\Step_0\sub_001.r2fesu*]
File Edit Properties Results Documentation View Options Window Help
F1 for Help
PA=0.0bar TA=0°C
0, 0, 0
Input Model Result
Properties torus
Name S5 Jacket J1 P1 P6 P2 P7
Difference coordinates [mm]
DX= 0 DY= 0 DZ= 188.76404 Length 188.76404
R2
P2
s2
RTor
P1
s1
R1
Material ST35.8
convex conkav
Torus radius (RTor) 210 mm
Dimensions [mm]
Insert outer diameter
Insert mean radius
Point Outer diameter Mean radius Wall thickness
P1: P6 Da1= 2000 R1= 990 S1= 20
P2: P7 Da2= 1764.0449 R2= 872.02247 S2= 20
Corrosion 0
Minus mill tolerance 2.5
Distribution
in axial direction 20 elements in circumferential direction 55 elements
Progression
(the distribution in circumferential direction is valid for all elements of the jacket)
OK Cancel
Consider internal pressure
Calculation output
Output of storing, loading ...
11:16:21 END FESU Total Time dt= 0.4

ROHR2 31.0 beta - FESU - [I:\Schul+Präsentation\Tutorials\English\FESU\Tank_Torispherical-head_with_nozzle\Step_0\sub_001.r2fesu*]

File Edit Properties Results Documentation View Options Window Help

F1 for Help | PA=0.0bar TA=0°C | 0, 0, 0

Input | Model | Result

Txt | Txt | Txt | Bmp | Meta file | HP GL

Properties torus

Name: S5 | Jacket: J1 | P1: P6 | P2: P7

Difference coordinates [mm]

DX= 0 | DY= 0 | DZ= 188.76404 | Length 188.76404

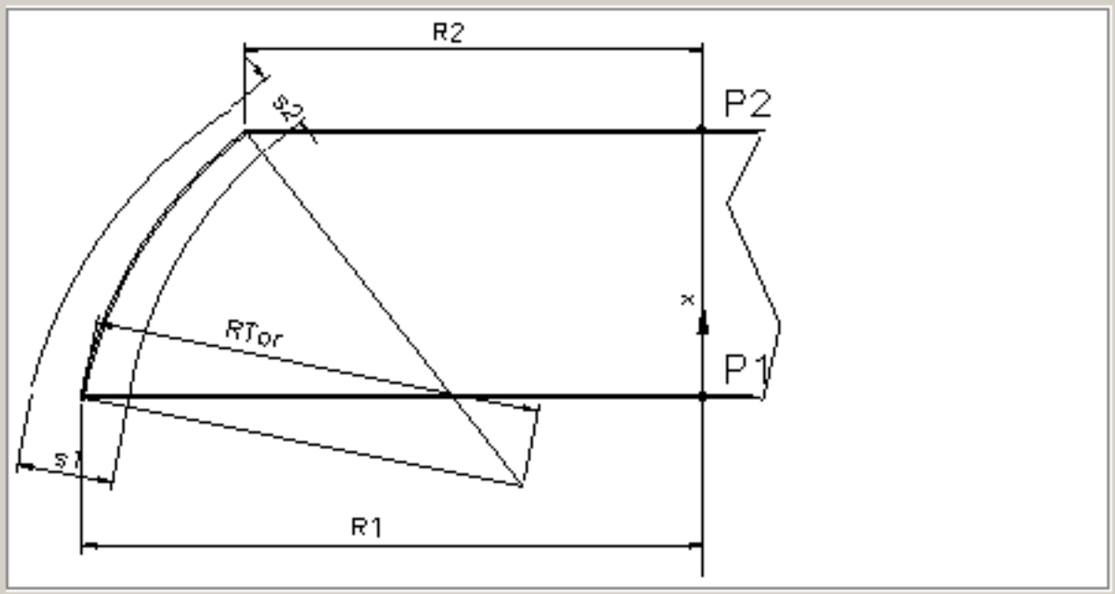

Material: ST35.8

convex | conkav | Torus radius (RTor): 210 mm

Dimensions [mm]

Insert outer diameter | Insert mean radius

Point	Outer diameter	Mean radius	Wall thickness
P1: P6	Da1= 2000	R1= 990	S1= 20
P2: P7	Da2= 1764.0449	R2= 872.02247	S2= 20
	Corrosion 0		Minus mill tolerance 2.5

Distribution

in axial direction 20 elements | in circumferential direction 55 elements

Progression

(the distribution in circumferential direction is valid for all elements of the jacket)

OK | Cancel | Consider internal pressure

Calculation output | Output of storing, loading ...

```
11:16:21 END FESU                    Total Time    dt=      0.4
```

ROHR2 31.0 beta - FESU - [I:\Schul+Präsentation\Tutorials\English\FESU\Tank_Torispherical-head_with_nozzle\Step_0\sub_001.r2fesu*]

File Edit Properties Results Documentation View Options Window Help

F1 for Help | PA=0.0bar TA=0°C | 0, 0, 0

Input | Model | Result

Txt
Txt
Txt
Bmp
Meta file
HP GL

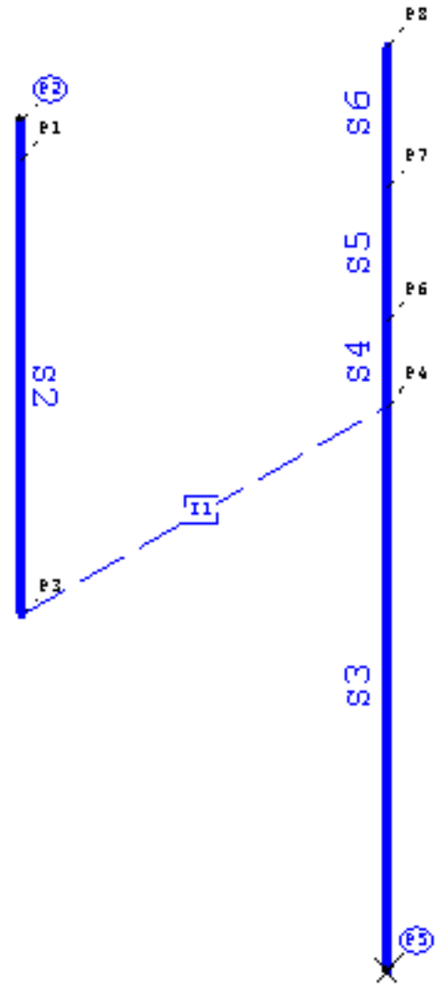

Calculation output | Output of storing, loading ...

11:16:21 END FESU Total Time dt= 0.4

Za
Ya
Xa

ROHR2 31.0 beta - FESU - [I:\Schul+Präsentation\Tutorials\English\FESU\Tank_Torispherical-head_with_nozzle\Step_0\sub_001.r2fesu*]

File Edit Properties Results Documentation View Options Window Help

F1 for Help | PA=0.0bar TA=0°C | 0, 0, 0

Input | Model | Result

Txt
Txt
Txt
Bmp
Meta file
HP GL

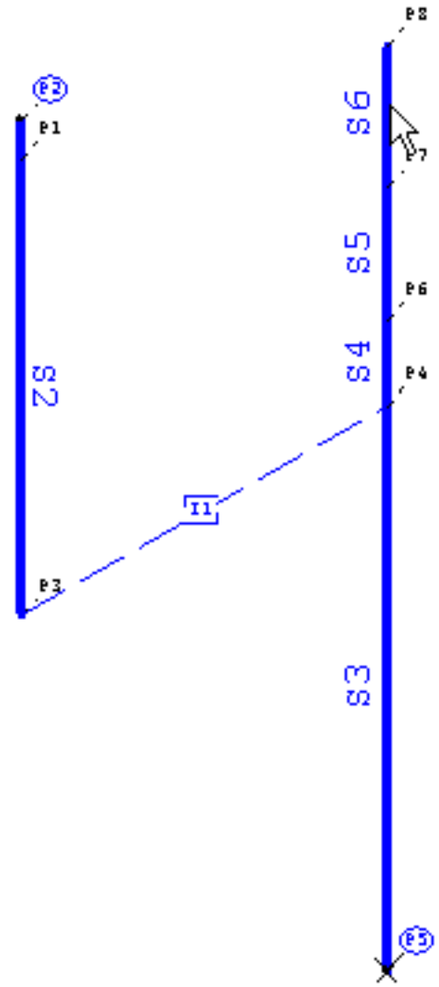

Calculation output | Output of storing, loading ...

11:16:21 END FESU Total Time dt= 0.4

Za
Ya
Xa

ROHR2 31.0 beta - FESU - [I:\Schul+Präsentation\Tutorials\English\FESU\Tank_Torispherical-head_with_nozzle\Step_0\sub_001.r2fesu*]

File Edit Properties Results Documentation View Options Window Help

F1 for Help | PA=0.0bar TA=0°C | 0, 0, 0

Input | Model | Result

Txt
Txt
Txt
Bmp
Meta file
HP GL

Properties spherical slice

Name S6 Jacket J1 P1 P7 P2 P8

Difference coordinates [mm]

DX= 0 DY= 0 DZ= 201.23595 Length 201.23595

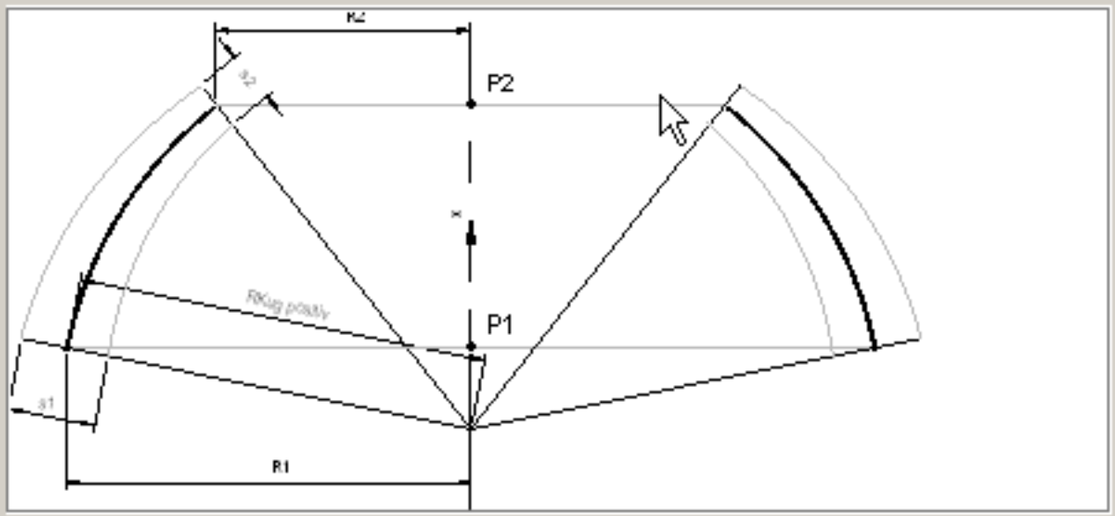

Material ST35.8 Sphere radius (RKug) 1990 mm

Dimensions [mm]

Insert outer diameter | Insert mean radius

Point	Outer diameter	Mean radius	Wall thickness
P1: P7	Da1= 1764.0449	R1= 872.02247	S1= 20
P2: P8	Da2= 0	R2= 0	S2= 20
	Corrosion 0		Minus mill tolerance 2.5

Distribution

in axial direction 8 elements in circumferential direction 55 elements

Progression

(the distribution in circumferential direction is valid for all elements of the jacket)

OK Cancel Consider internal pressure

Calculation output | Output of storing, loading ...

```
11:16:21 END FESU                    Total Time     dt=      0.4
```

ROHR2 31.0 beta - FESU - [I:\Schul+Präsentation\Tutorials\English\FESU\Tank_Torispherical-head_with_nozzle\Step_0\sub_001.r2fesu*]

File Edit Properties Results Documentation View Options Window Help

F1 for Help | PA=0.0bar TA=0°C | 0, 0, 0

Input | Model | Result

Txt | Txt | Txt | Bmp | Meta file | HP GL

Properties spherical slice

Name: S6 | Jacket: J1 | P1: P7 | P2: P8

Difference coordinates [mm]

DX= 0 | DY= 0 | DZ= 201.23595 | Length 201.23595

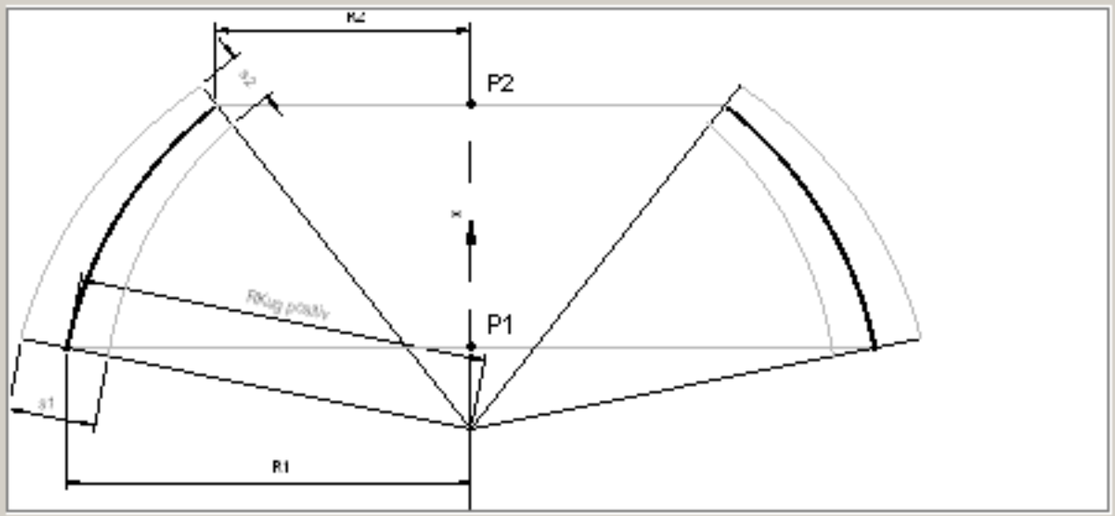

Material: ST35.8 | Sphere radius (RKug): 1990 mm

Dimensions [mm]

Insert outer diameter | Insert mean radius

Point	Outer diameter	Mean radius	Wall thickness
P1: P7	Da1= 1764.0449	R1= 872.02247	S1= 20
P2: P8	Da2= 0	R2= 0	S2= 20
	Corrosion 0		Minus mill tolerance 2.5

Distribution

in axial direction 20 elements | in circumferential direction 55 elements

Progression

(the distribution in circumferential direction is valid for all elements of the jacket)

OK | Cancel | Consider internal pressure

Calculation output | Output of storing, loading ...

11:16:21 END FESU Total Time dt= 0.4

ROHR2 31.0 beta - FESU - [I:\Schul+Präsentation\Tutorials\English\FESU\Tank_Torispherical-head_with_nozzle\Step_0\sub_001.r2fesu*]

File Edit Properties Results Documentation View Options Window Help

F1 for Help | PA=0.0bar TA=0°C | 0, 0, 0

Input | Model | Result

Txt | Txt | Txt | Bmp | Meta file | HP GL

Properties spherical slice

Name S6 | Jacket J1 | P1 P7 | P2 P8

Difference coordinates [mm]

DX= 0 | DY= 0 | DZ= 201.23595 | Length 201.23595

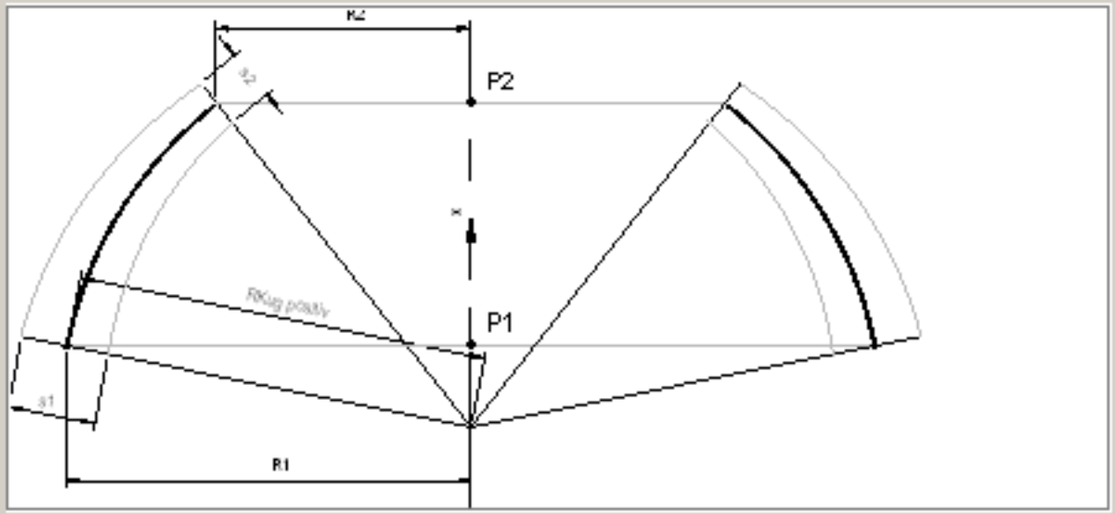

Material ST35.8 | Sphere radius (RKug) 1990 mm

Dimensions [mm]

Insert outer diameter | Insert mean radius

Point	Outer diameter	Mean radius	Wall thickness
P1: P7	Da1= 1764.0449	R1= 872.02247	S1= 20
P2: P8	Da2= 0	R2= 0	S2= 20
	Corrosion 0		Minus mill tolerance 2.5

Distribution

in axial direction 20 elements | in circumferential direction 55 elements

Progression

(the distribution in circumferential direction is valid for all elements of the jacket)

OK | Cancel | Consider internal pressure

Calculation output | Output of storing, loading ...

11:16:21 END FESU Total Time dt= 0.4

ROHR2 31.0 beta - FESU - [I:\Schul+Präsentation\Tutorials\English\FESU\Tank_Torispherical-head_with_nozzle\Step_0\sub_001.r2fesu*]

File Edit Properties Results Documentation View Options Window Help

F1 for Help | PA=0.0bar TA=0°C | 0, 0, 0

Input | Model | Result

Txt | Txt | Txt | Bmp | Meta file | HP GL

Properties spherical slice

Name S6 Jacket J1 P1 P7 P2 P8

Difference coordinates [mm]

DX= 0 DY= 0 DZ= 201.23595 Length 201.23595

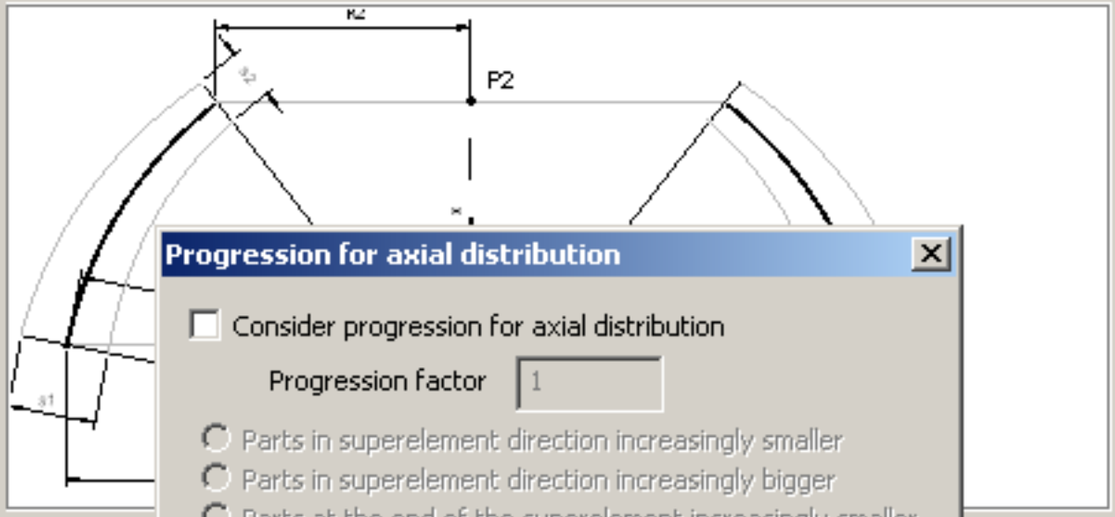

Progression for axial distribution

Consider progression for axial distribution

Progression factor 1

- Parts in superelement direction increasingly smaller
- Parts in superelement direction increasingly bigger
- Parts at the end of the superelement increasingly smaller
- Parts at the end of the superelement increasingly bigger

OK Cancel

Material S 0 mm

Dimension:

Point thickness

P1:	P7	Da1=	1764.0449	R1=	872.02247	S1=	20
P2:	P8	Da2=	0	R2=	0	S2=	20

Corrosion 0 Minus mill tolerance 2.5

Distribution

in axial direction 20 elements in circumferential direction 55 elements

Progression

(the distribution in circumferential direction is valid for all elements of the jacket)

OK Cancel Consider internal pressure

Calculation output | Output of storing, loading ...

11:16:21 END FESU Total Time dt= 0.4

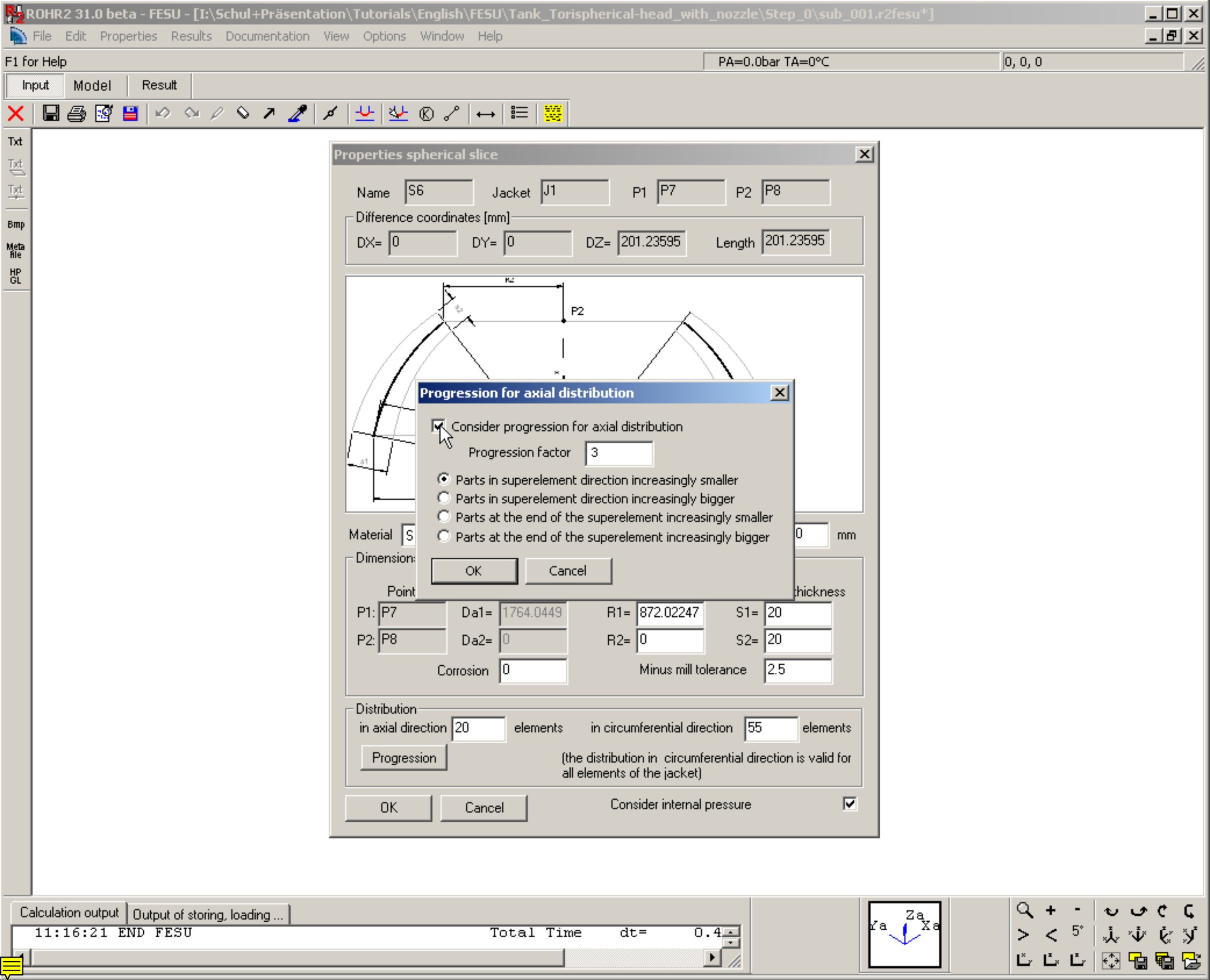
ROHR2 31.0 beta - FESU - [I:\Schul+Präsentation\Tutorials\English\FESU\Tank_Torispherical-head_with_nozzle\Step_0\sub_001.r2fesu*]
File Edit Properties Results Documentation View Options Window Help
F1 for Help
PA=0.0bar TA=0°C
0, 0, 0
Input Model Result
Properties spherical slice
Name S6 Jacket J1 P1 P7 P2 P8
Difference coordinates [mm]
DX= 0 DY= 0 DZ= 201.23595 Length 201.23595
P2
Progression for axial distribution
Consider progression for axial distribution
Progression factor 3
Parts in superelement direction increasingly smaller
Parts in superelement direction increasingly bigger
Parts at the end of the superelement increasingly smaller
Parts at the end of the superelement increasingly bigger
OK Cancel
Material S
0 mm
Dimension:
Point
thickness
P1: P7 Da1= 1764.0449 R1= 872.02247 S1= 20
P2: P8 Da2= 0 R2= 0 S2= 20
Corrosion 0 Minus mill tolerance 2.5
Distribution
in axial direction 20 elements in circumferential direction 55 elements
Progression
(the distribution in circumferential direction is valid for all elements of the jacket)
OK Cancel Consider internal pressure
Calculation output Output of storing, loading ...
11:16:21 END FESU Total Time dt= 0.4

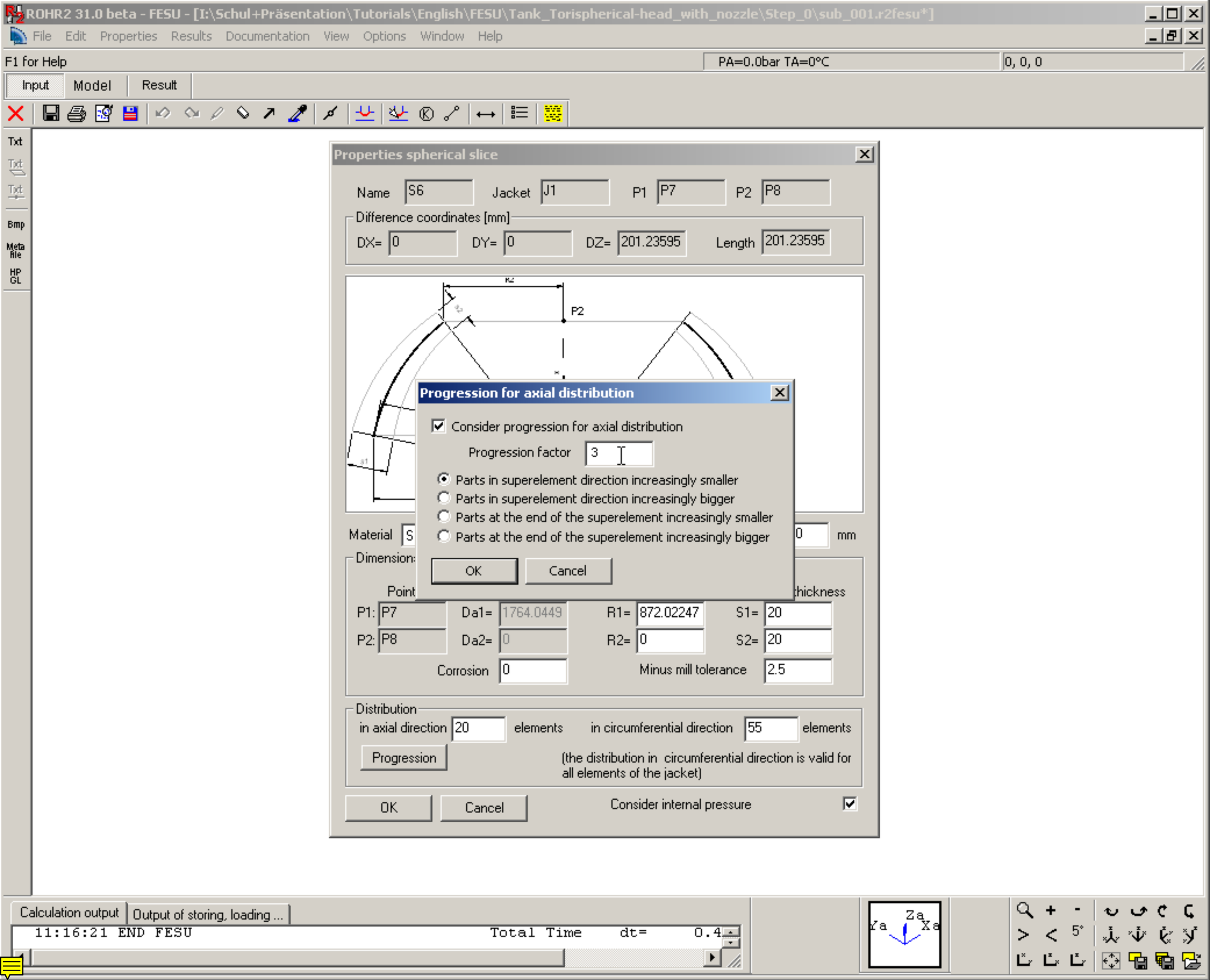
ROHR2 31.0 beta - FESU - [I:\Schul+Präsentation\Tutorials\English\FESU\Tank_Torispherical-head_with_nozzle\Step_0\sub_001.r2fesu*]
File Edit Properties Results Documentation View Options Window Help
F1 for Help
PA=0.0bar TA=0°C
0, 0, 0
Input Model Result
Properties spherical slice
Name S6 Jacket J1 P1 P7 P2 P8
Difference coordinates [mm]
DX= 0 DY= 0 DZ= 201.23595 Length 201.23595
P2
Progression for axial distribution
Consider progression for axial distribution
Progression factor 3
Parts in superelement direction increasingly smaller
Parts in superelement direction increasingly bigger
Parts at the end of the superelement increasingly smaller
Parts at the end of the superelement increasingly bigger
OK Cancel
Material S
0 mm
Dimension:
Point
thickness
P1: P7 Da1= 1764.0449 R1= 872.02247 S1= 20
P2: P8 Da2= 0 R2= 0 S2= 20
Corrosion 0 Minus mill tolerance 2.5
Distribution
in axial direction 20 elements in circumferential direction 55 elements
Progression
(the distribution in circumferential direction is valid for all elements of the jacket)
OK Cancel Consider internal pressure
Calculation output Output of storing, loading ...
11:16:21 END FESU Total Time dt= 0.4

ROHR2 31.0 beta - FESU - [I:\Schul+Präsentation\Tutorials\English\FESU\Tank_Torispherical-head_with_nozzle\Step_0\sub_001.r2fesu*]

File Edit Properties Results Documentation View Options Window Help

F1 for Help | PA=0.0bar TA=0°C | 0, 0, 0

Input | Model | Result

Txt | Txt | Txt | Bmp | Meta file | HP GL

Properties spherical slice

Name S6 Jacket J1 P1 P7 P2 P8

Difference coordinates [mm]

DX= 0 DY= 0 DZ= 201.23595 Length 201.23595

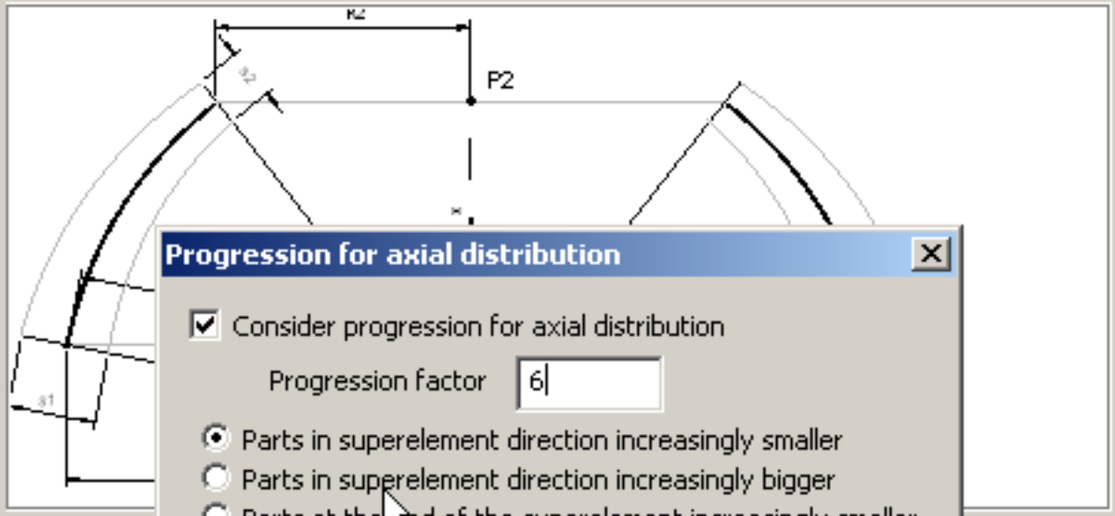

Progression for axial distribution

Consider progression for axial distribution

Progression factor 6

- Parts in superelement direction increasingly smaller
- Parts in superelement direction increasingly bigger
- Parts at the end of the superelement increasingly smaller
- Parts at the end of the superelement increasingly bigger

OK Cancel

Material S ... 0 mm

Dimension:

Point ... thickness

P1: P7 Da1= 1764.0449 R1= 872.02247 S1= 20

P2: P8 Da2= 0 R2= 0 S2= 20

Corrosion 0 Minus mill tolerance 2.5

Distribution

in axial direction 20 elements in circumferential direction 55 elements

Progression

(the distribution in circumferential direction is valid for all elements of the jacket)

OK Cancel Consider internal pressure

Calculation output | Output of storing, loading ...

11:16:21 END FESU Total Time dt= 0.4

ROHR2 31.0 beta - FESU - [I:\Schul+Präsentation\Tutorials\English\FESU\Tank_Torispherical-head_with_nozzle\Step_0\sub_001.r2fesu*]

File Edit Properties Results Documentation View Options Window Help

F1 for Help | PA=0.0bar TA=0°C | 0, 0, 0

Input | Model | Result

Txt | Txt | Txt | Bmp | Meta file | HP GL

Properties spherical slice

Name S6 | Jacket J1 | P1 P7 | P2 P8

Difference coordinates [mm]

DX= 0 | DY= 0 | DZ= 201.23595 | Length 201.23595

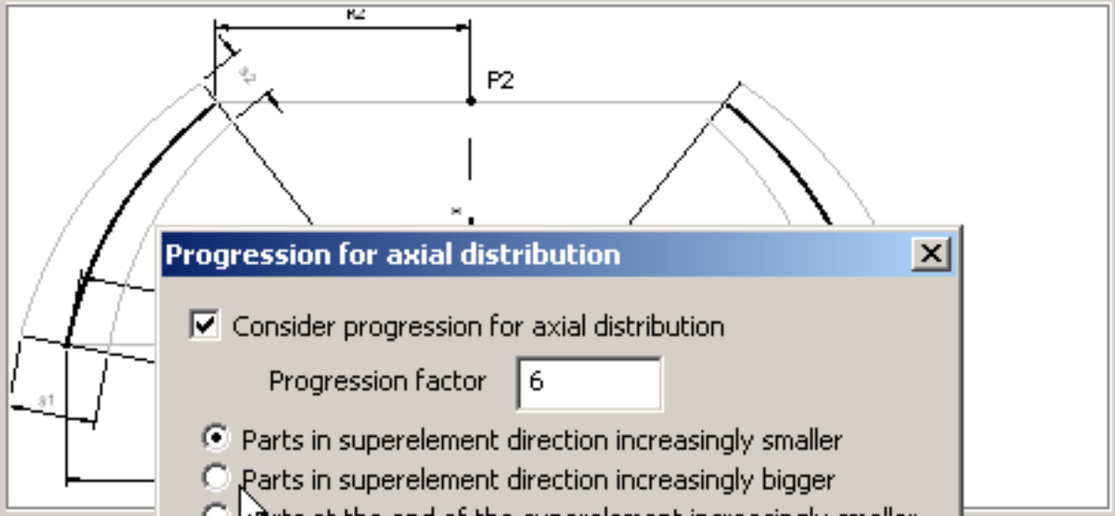

Progression for axial distribution

Consider progression for axial distribution

Progression factor 6

- (•) Parts in superelement direction increasingly smaller
- ( ) Parts in superelement direction increasingly bigger
- ( ) Parts at the end of the superelement increasingly smaller
- ( ) Parts at the end of the superelement increasingly bigger

OK | Cancel

Material S | 0 mm

Dimension:

Point | thickness

P1: P7 | Da1= 1764.0449 | R1= 872.02247 | S1= 20

P2: P8 | Da2= 0 | R2= 0 | S2= 20

Corrosion 0 | Minus mill tolerance 2.5

Distribution

in axial direction 20 elements | in circumferential direction 55 elements

Progression

(the distribution in circumferential direction is valid for all elements of the jacket)

OK | Cancel | Consider internal pressure

Calculation output | Output of storing, loading ...

11:16:21 END FESU Total Time dt= 0.4

Za Ya Xa

ROHR2 31.0 beta - FESU - [I:\Schul+Präsentation\Tutorials\English\FESU\Tank_Torispherical-head_with_nozzle\Step_0\sub_001.r2fesu*]

File Edit Properties Results Documentation View Options Window Help

F1 for Help | PA=0.0bar TA=0°C | 0, 0, 0

Input | Model | Result

Txt | Txt | Txt | Bmp | Meta file | HP GL

Properties spherical slice

Name S6 Jacket J1 P1 P7 P2 P8

Difference coordinates [mm]

DX= 0 DY= 0 DZ= 201.23595 Length 201.23595

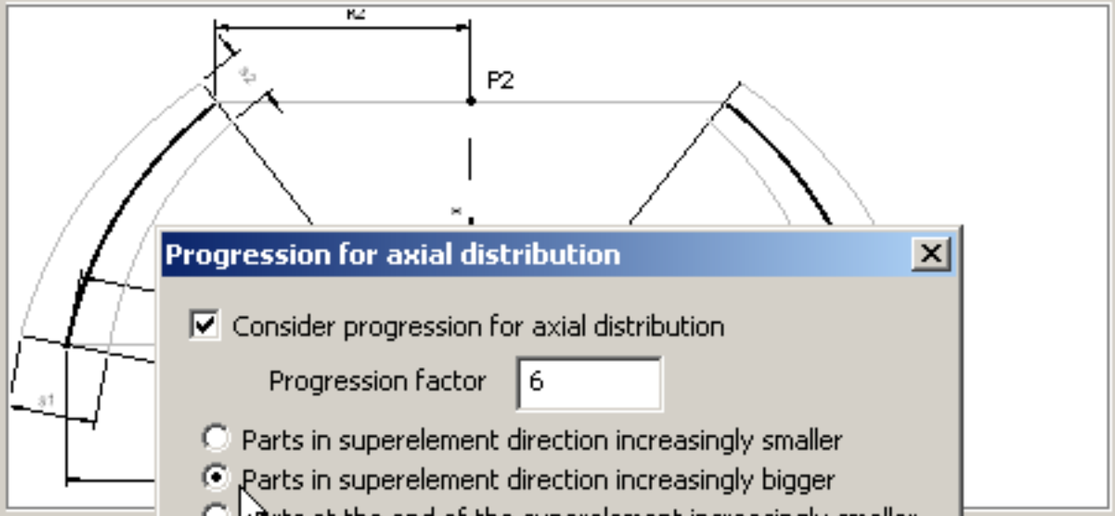

Progression for axial distribution

- [x] Consider progression for axial distribution

Progression factor 6

- ( ) Parts in superelement direction increasingly smaller
- (•) Parts in superelement direction increasingly bigger
- ( ) Parts at the end of the superelement increasingly smaller
- ( ) Parts at the end of the superelement increasingly bigger

OK Cancel

Material S ... 0 mm

Dimension:

Point ... thickness

P1:	P7	Da1=	1764.0449	R1=	872.02247	S1=	20
P2:	P8	Da2=	0	R2=	0	S2=	20

Corrosion 0 Minus mill tolerance 2.5

Distribution

in axial direction 20 elements in circumferential direction 55 elements

Progression

(the distribution in circumferential direction is valid for all elements of the jacket)

OK Cancel Consider internal pressure [x]

Calculation output | Output of storing, loading ...

```
11:16:21 END FESU                    Total Time    dt=      0.4
```

Ya Za Xa

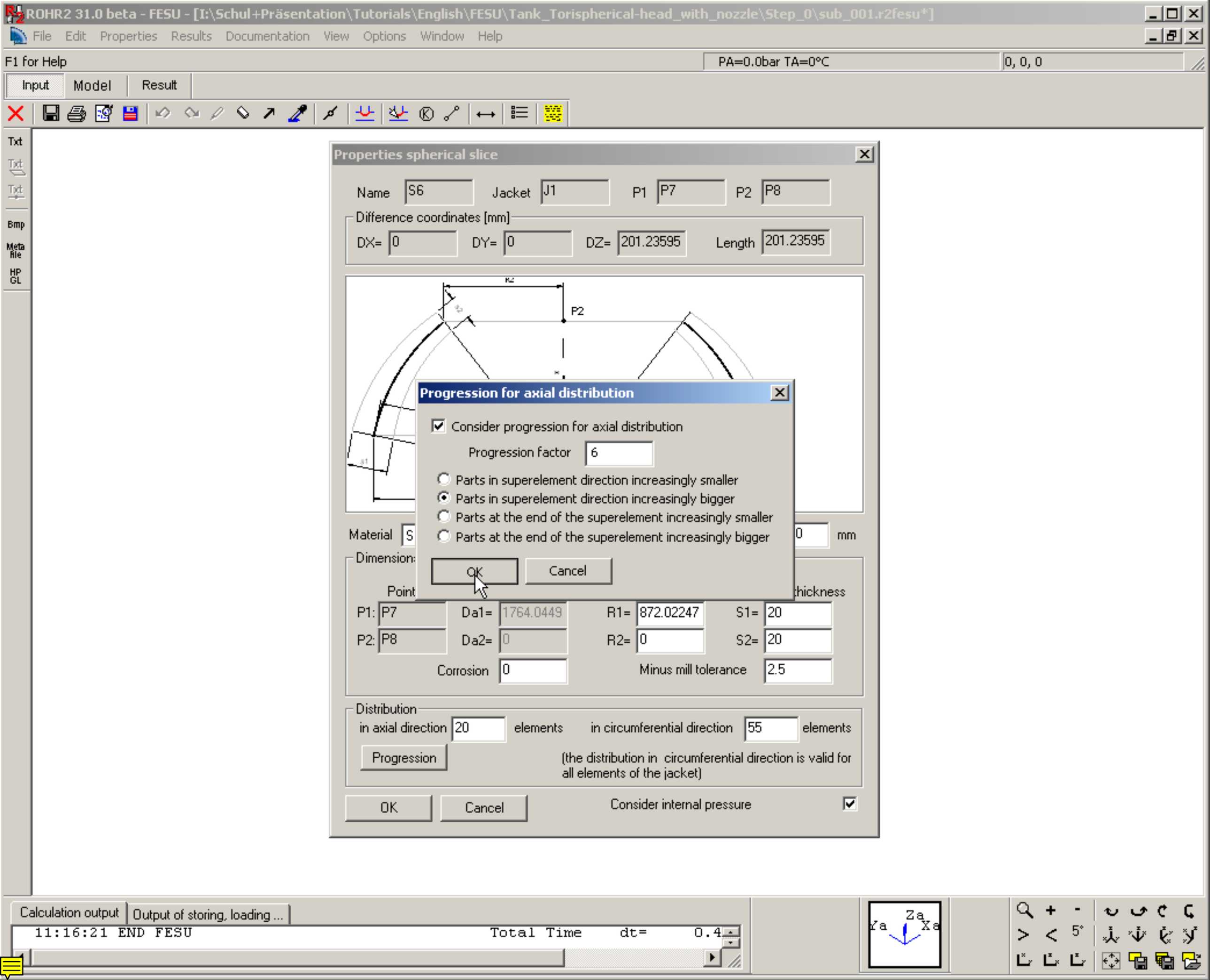
ROHR2 31.0 beta - FESU - [I:\Schul+Präsentation\Tutorials\English\FESU\Tank_Torispherical-head_with_nozzle\Step_0\sub_001.r2fesu*]
File Edit Properties Results Documentation View Options Window Help
F1 for Help
PA=0.0bar TA=0°C
0, 0, 0
Input Model Result
Properties spherical slice
Name S6 Jacket J1 P1 P7 P2 P8
Difference coordinates [mm]
DX= 0 DY= 0 DZ= 201.23595 Length 201.23595
P2
Progression for axial distribution
Consider progression for axial distribution
Progression factor 6
Parts in superelement direction increasingly smaller
Parts in superelement direction increasingly bigger
Parts at the end of the superelement increasingly smaller
Parts at the end of the superelement increasingly bigger
OK Cancel
Material
mm
Dimension:
Point
thickness
P1: P7 Da1= 1764.0449 R1= 872.02247 S1= 20
P2: P8 Da2= 0 R2= 0 S2= 20
Corrosion 0 Minus mill tolerance 2.5
Distribution
in axial direction 20 elements in circumferential direction 55 elements
Progression
(the distribution in circumferential direction is valid for all elements of the jacket)
OK Cancel Consider internal pressure
Calculation output Output of storing, loading ...
11:16:21 END FESU Total Time dt= 0.4

ROHR2 31.0 beta - FESU - [I:\Schul+Präsentation\Tutorials\English\FESU\Tank_Torispherical-head_with_nozzle\Step_0\sub_001.r2fesu*]

File Edit Properties Results Documentation View Options Window Help

F1 for Help | PA=0.0bar TA=0°C | 0, 0, 0

Input | Model | Result

Txt | Txt | Txt | Bmp | Meta file | HP GL

Properties spherical slice

Name: S6 | Jacket: J1 | P1: P7 | P2: P8

Difference coordinates [mm]

DX= 0 | DY= 0 | DZ= 201.23595 | Length 201.23595

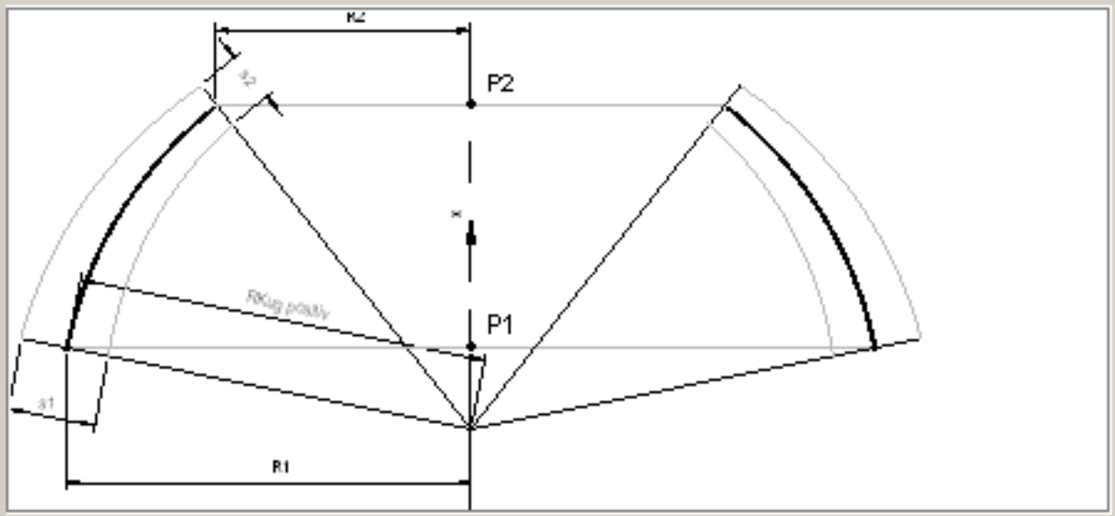

Material: ST35.8 | Sphere radius (RKug) 1990 mm

Dimensions [mm]

Insert outer diameter | Insert mean radius

Point	Outer diameter	Mean radius	Wall thickness
P1: P7	Da1= 1764.0449	R1= 872.02247	S1= 20
P2: P8	Da2= 0	R2= 0	S2= 20
	Corrosion 0		Minus mill tolerance 2.5

Distribution

in axial direction 20 elements | in circumferential direction 55 elements

Progression

(the distribution in circumferential direction is valid for all elements of the jacket)

OK | Cancel | Consider internal pressure

Calculation output | Output of storing, loading ...

11:16:21 END FESU Total Time dt= 0.4

ROHR2 31.0 beta - FESU - [I:\Schul+Präsentation\Tutorials\English\FESU\Tank_Torispherical-head_with_nozzle\Step_0\sub_001.r2fesu*]

File Edit Properties Results Documentation View Options Window Help

F1 for Help | PA=0.0bar TA=0°C | 0, 0, 0

Input | Model | Result

Txt
Txt
Txt
Bmp
Meta file
HP GL

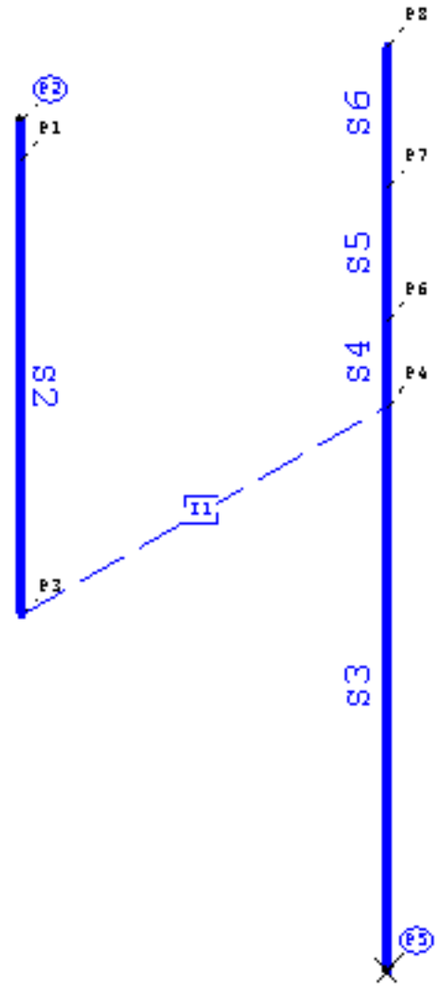

Calculation output | Output of storing, loading ...

11:16:21 END FESU Total Time dt= 0.4

Za
Ya
Xa

ROHR2 31.0 beta - FESU - [I:\Schul+Präsentation\Tutorials\English\FESU\Tank_Torispherical-head_with_nozzle\Step_0\sub_001.r2fesu*]

File Edit Properties Results Documentation View Options Window Help

PA=0.0bar TA=0°C | 0, 0, 0

Input | Model

Regenerate the model to check the new mesh

Txt
Txt
Txt
Bmp
Meta file
HP GL

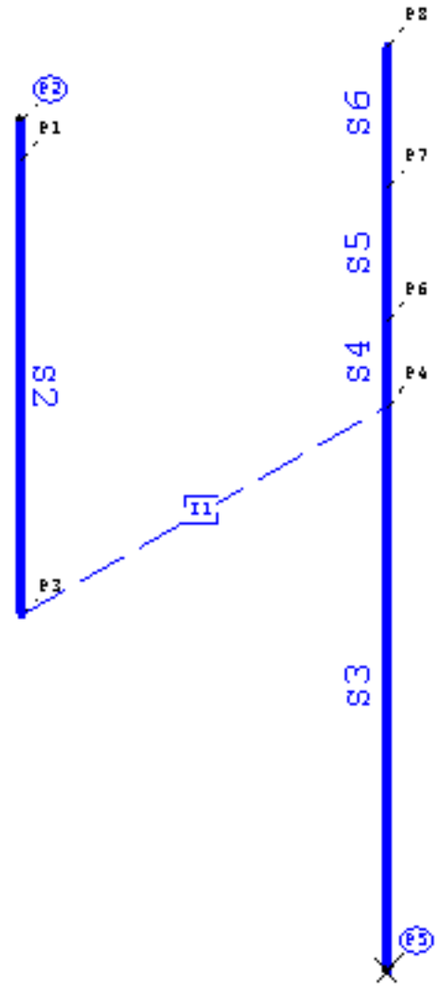

Calculation output | Output of storing, loading ...

11:16:21 END FESU Total Time dt= 0.4

Za Ya Xa

ROHR2 31.0 beta - FESU - [I:\Schul+Präsentation\Tutorials\English\FESU\Tank_Torispherical-head_with_nozzle\Step_0\sub_001.r2fesu]

File Edit Properties Results Documentation View Options Window Help

F1 for Help | PA=0.0bar TA=0°C | 0, 0, 0

Input Model Result

Txt Txt Txt Bmp Meta file HP GL

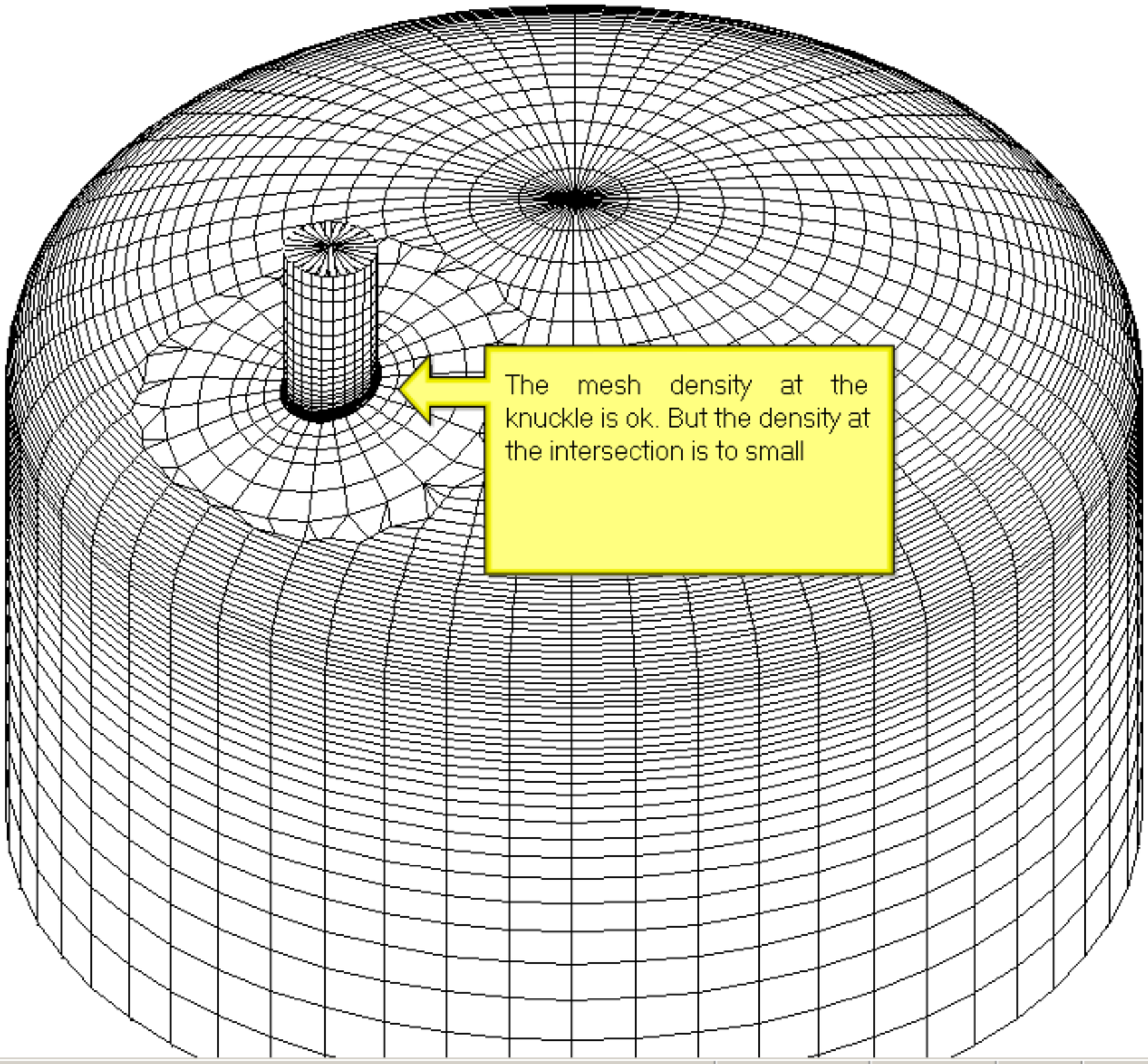

Calculation output | Output of storing, loading ...

11:18:14 END FESU Total Time dt= 0.6

Za Ya Xa

ROHR2 31.0 beta - FESU - [I:\Schul+Präsentation\Tutorials\English\FESU\Tank_Torispherical-head_with_nozzle\Step_0\sub_001.r2fesu]

File Edit Properties Results Documentation View Options Window Help

Input mode

PA=0.0bar TA=0°C

0, 0, 0

Input

Change to the input mode to edit the intersection

Txt

Txt

Txt

Bmp

Meta file

HP GL

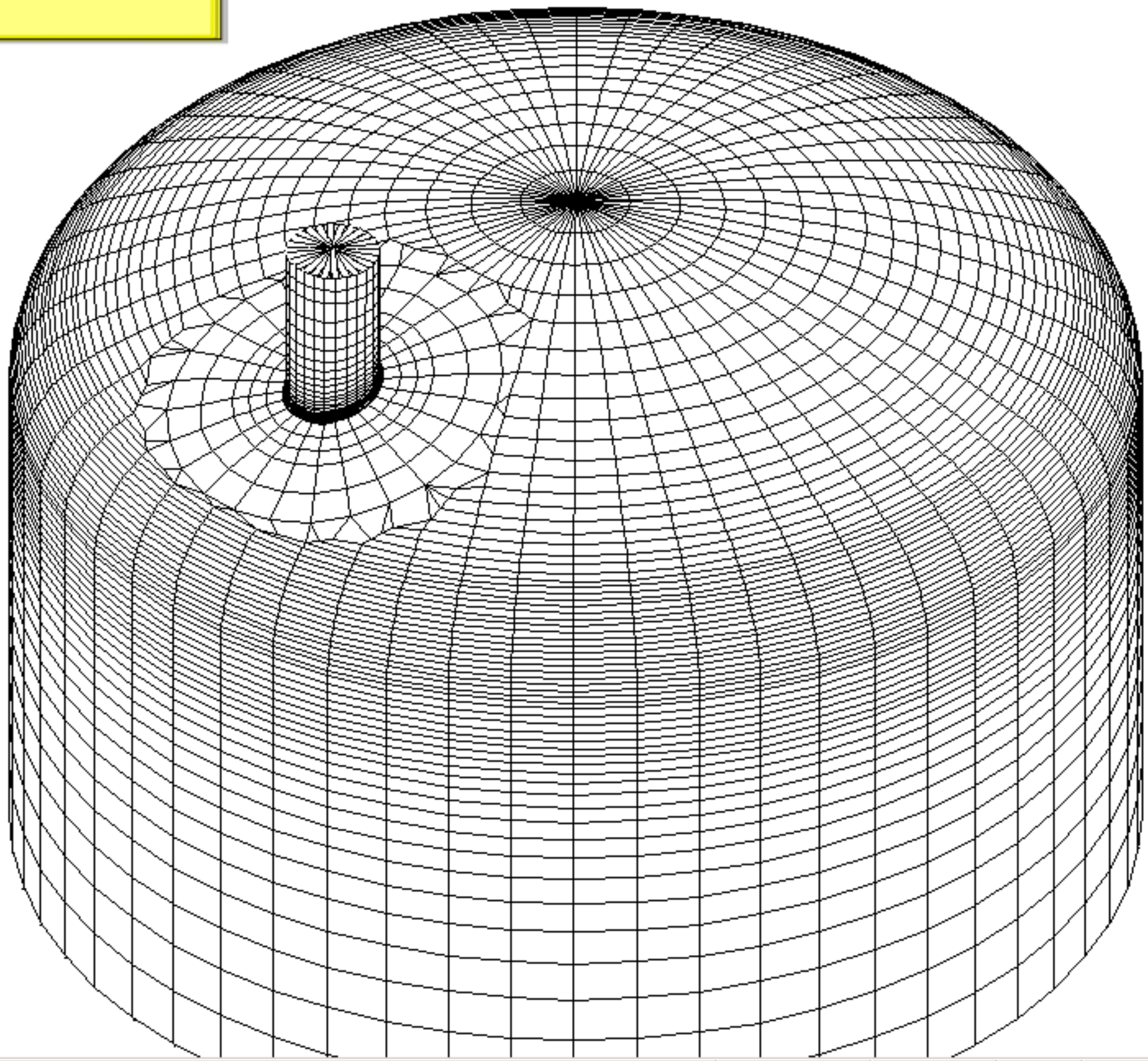

Calculation output

Output of storing, loading ...

11:18:14 END FESU Total Time dt= 0.6

Za

Ya

Xa

5°

ROHR2 31.0 beta - FESU - [I:\Schul+Präsentation\Tutorials\English\FESU\Tank_Torispherical-head_with_nozzle\Step_0\sub_001.r2fesu]

File Edit Properties Results Documentation View Options Window Help

F1 for Help | PA=0.0bar TA=0°C | 0, 0, 0

Input | Model | Result

Txt
Txt
Txt
Bmp
Meta file
HP GL

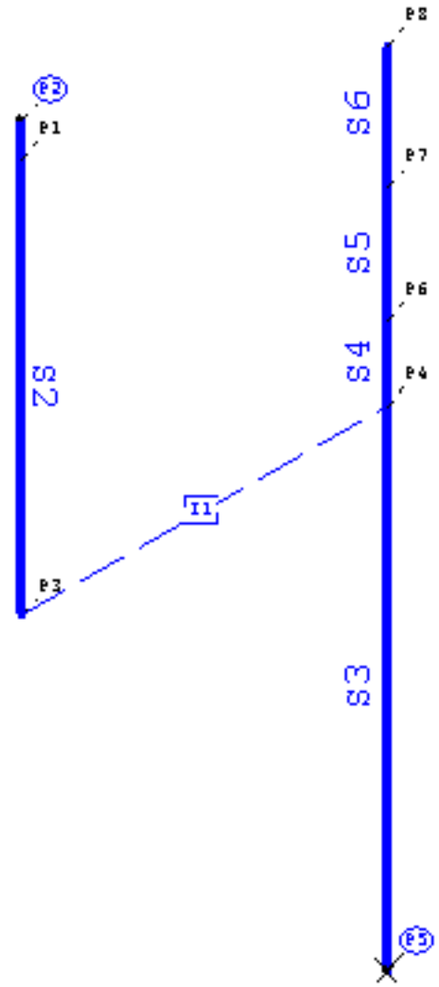

Calculation output | Output of storing, loading ...

11:18:14 END FESU Total Time dt= 0.6

Za
Ya
Xa

ROHR2 31.0 beta - FESU - [I:\Schul+Präsentation\Tutorials\English\FESU\Tank_Torispherical-head_with_nozzle\Step_0\sub_001.r2fesu]

File Edit Properties Results Documentation View Options Window Help

F1 for Help | PA=0.0bar TA=0°C | 0, 0, 0

Input | Model | Result

Txt
Txt
Txt
Bmp
Meta file
HP GL

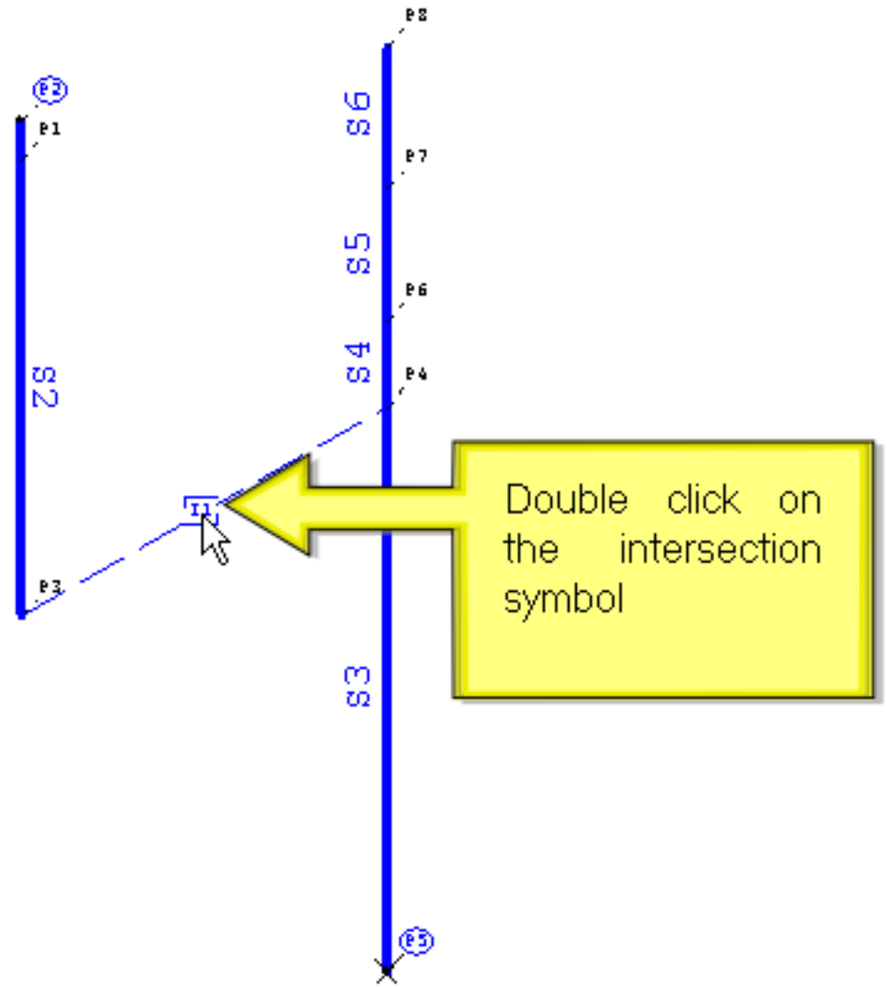

Calculation output | Output of storing, loading ...

11:18:14 END FESU Total Time dt= 0.6

Za Ya Xa

ROHR2 31.0 beta - FESU - [I:\Schul+Präsentation\Tutorials\English\FESU\Tank_Torispherical-head_with_nozzle\Step_0\sub_001.r2fesu]

File Edit Properties Results Documentation View Options Window Help

F1 for Help | PA=0.0bar TA=0°C | 0, 0, 0

Input | Model | Result

Intersection

Name: I1

Superelement: S2 is intersected with jacket: J1

Type of intersection

(•) Nozzle ( ) Trunion ( ) Bore

Fillet on the surface (AROV): 0 mm

Factor for add. thickness at sharp-edged intersection: 0

Scaling factor for with ln (analysis region on the nozzle): 1

Scaling factor for with ls (analysis region on the jacket): 1

Distribution in the region of the intersection

Region	n0	n1	n2	n3	n4	n5	n6	n7
No. of elements	3	0	3	3	3	3	2	0

Type of internal projection

(•) No internal projection
( ) Parallel to intersection line
( ) Orthogonal to the nozzle

Length of the internal projection: 0 mm

Reinforcing pad

[ ] with reinforcing pad Type of model: ( ) single-shell (•) double-shell

Width of the reinforcing pad (AKrag): 0 mm

Thickness of the reinforcing pad: 0 mm

No. of elements on the reinforcing pad (nFEK): 0

Material:

OK | Cancel | Default

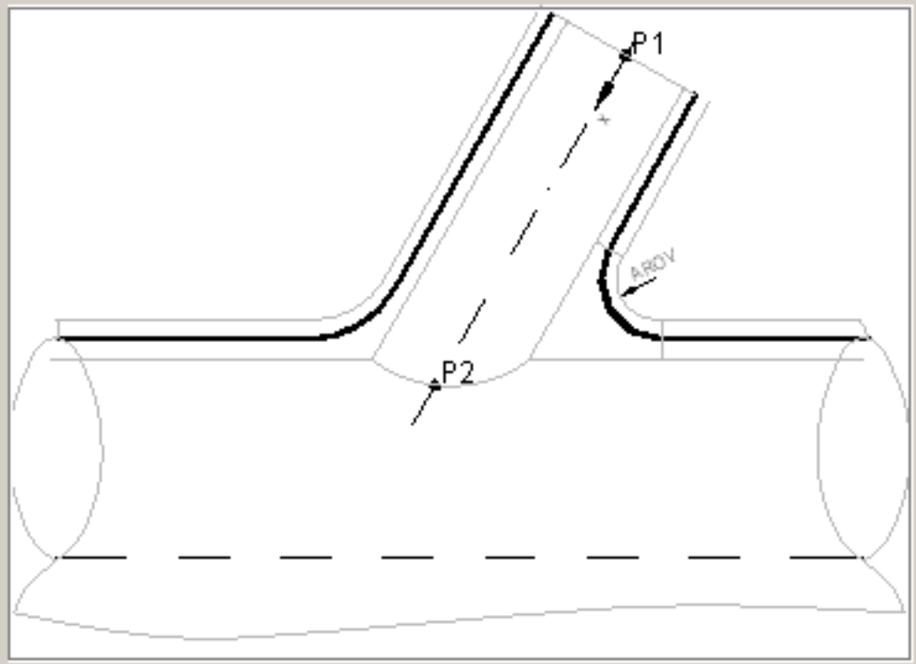

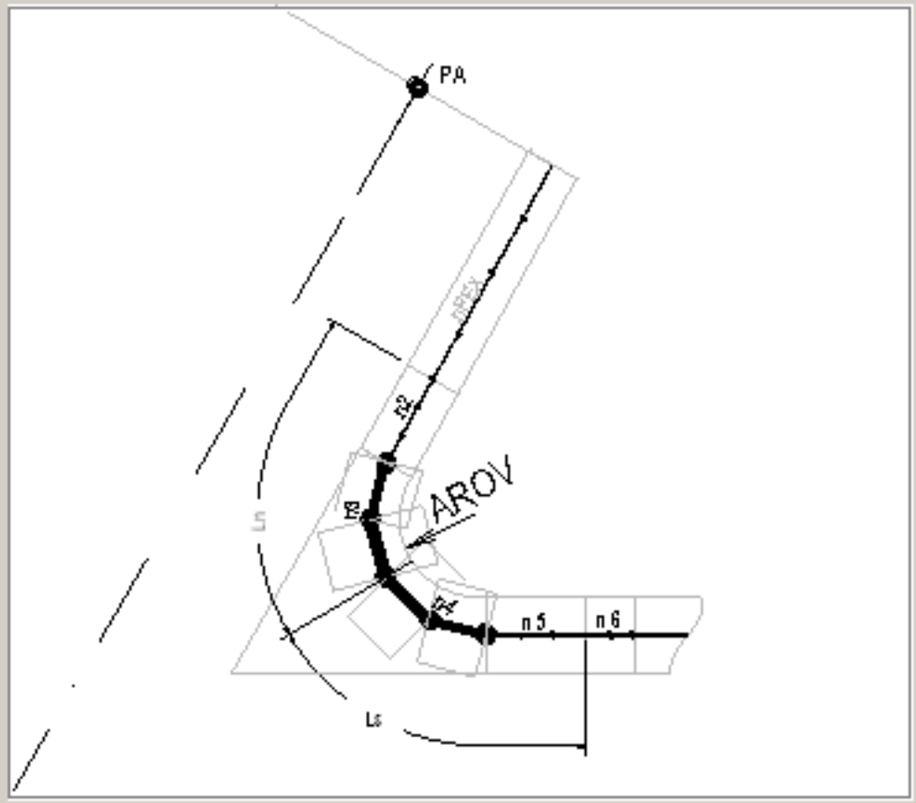

Calculation output | Output of storing, loading ...

11:18:14 END FESU Total Time dt= 0.6

ROHR2 31.0 beta - FESU - [I:\Schul+Präsentation\Tutorials\English\FESU\Tank_Torispherical-head_with_nozzle\Step_0\sub_001.r2fesu]

File Edit Properties Results Documentation View Options Window Help

F1 for Help | PA=0.0bar TA=0°C | 0, 0, 0

Input | Model | Result

Intersection

Name: I1

Superelement: S2 is intersected with jacket: J1

Type of intersection

(•) Nozzle ( ) Trunion ( ) Bore

Fillet on the surface (AROV): 0 mm

Factor for add. thickness at sharp-edged intersection: 0

Scaling factor for with ln (analysis region on the nozzle): 1

Scaling factor for with ls (analysis region on the jacket): 1

Distribution in the region of the intersection

Region	n0	n1	n2	n3	n4	n5	n6	n7
No. of elements	3	0	3	3	3	3	2	0

Type of internal projection

(•) No internal projection
( ) Parallel to intersection line
( ) Orthogonal to the nozzle

Length of the internal projection: 0 mm

Reinforcing pad

[ ] with reinforcing pad Type of model: ( ) single-shell (•) double-shell

Width of the reinforcing pad (AKrag): 0 mm

Thickness of the reinforcing pad: 0 mm

No. of elements on the reinforcing pad (nFEK): 0

Material:

OK | Cancel | Default

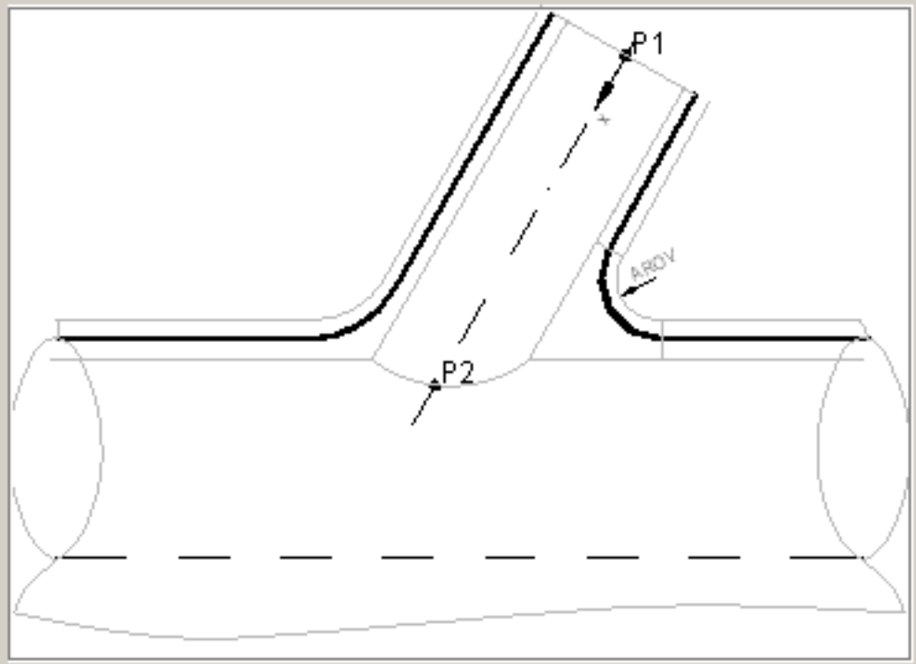

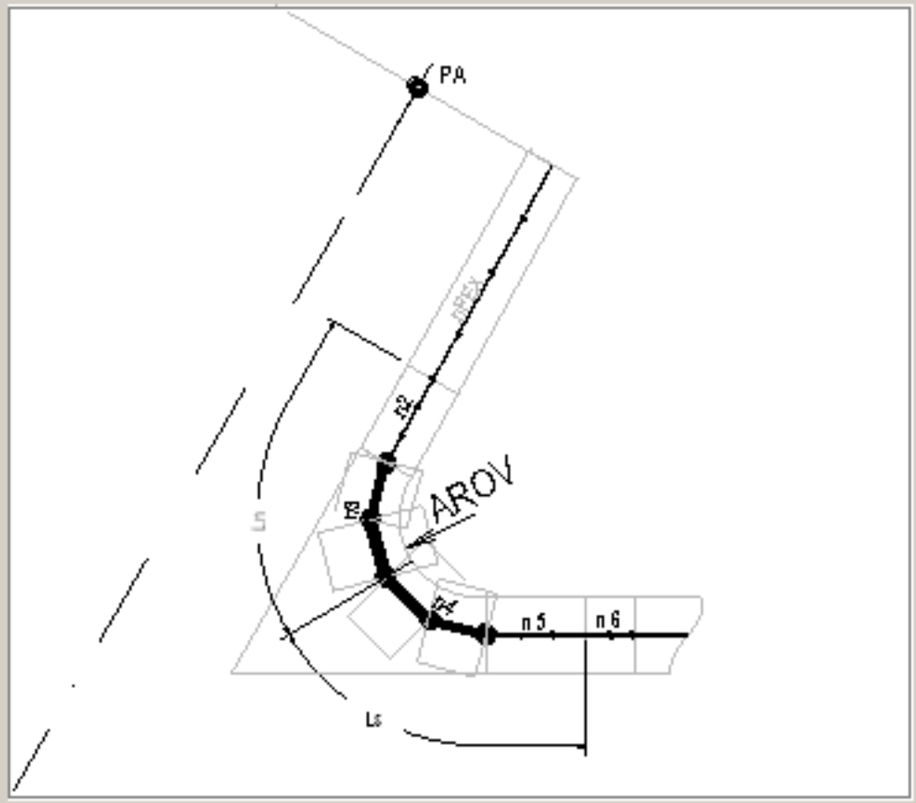

Calculation output | Output of storing, loading ...

11:18:14 END FESU Total Time dt= 0.6

ROHR2 31.0 beta - FESU - [I:\Schul+Präsentation\Tutorials\English\FESU\Tank_Torispherical-head_with_nozzle\Step_0\sub_001.r2fesu]

File Edit Properties Results Documentation View Options Window Help

F1 for Help | PA=0.0bar TA=0°C | 0, 0, 0

Input | Model | Result

Intersection

Name: I1

Superelement: S2 is intersected with jacket: J1

Type of intersection

(•) Nozzle ( ) Trunion ( ) Bore

Fillet on the surface (AROV): 0 mm

Factor for add. thickness at sharp-edged intersection: 0

Scaling factor for with ln (analysis region on the nozzle): 1

Scaling factor for with ls (analysis region on the jacket): 1

Distribution in the region of the intersection

Region	n0	n1	n2	n3	n4	n5	n6	n7
No. of elements	3	0	3	3	3	11		

Change the numbers of elements in the region 'n5' to eleven

Type of internal projection

(•) No internal projection
( ) Parallel to intersection line
( ) Orthogonal to the nozzle

Length of the internal projection: 0 mm

Reinforcing pad

[ ] with reinforcing pad Type of model: ( ) single-shell (•) double-shell

Width of the reinforcing pad (AKrag): 0 mm

Thickness of the reinforcing pad: 0 mm

No. of elements on the reinforcing pad (nFEK): 0

Material:

OK | Cancel | Default

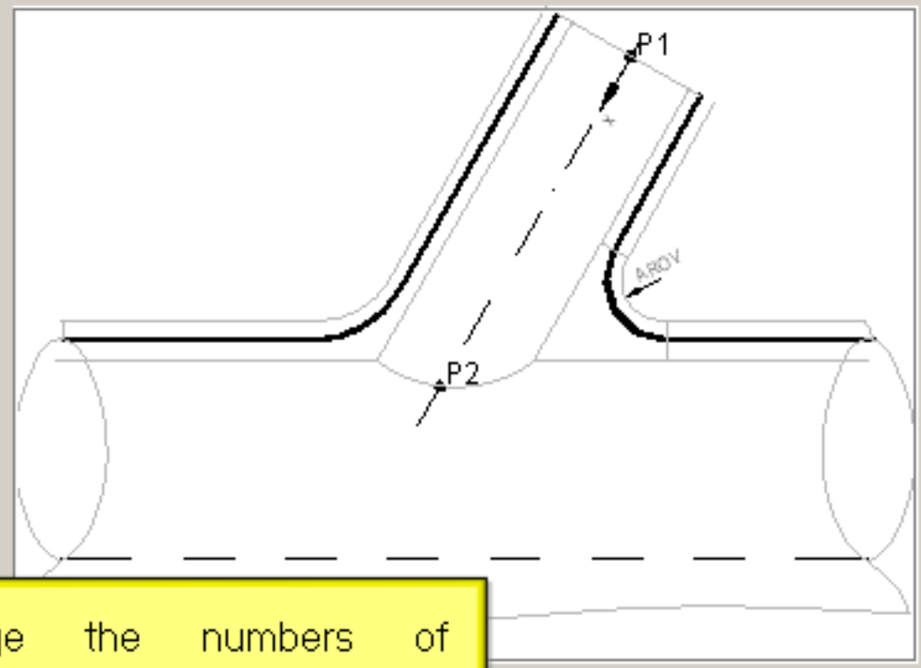

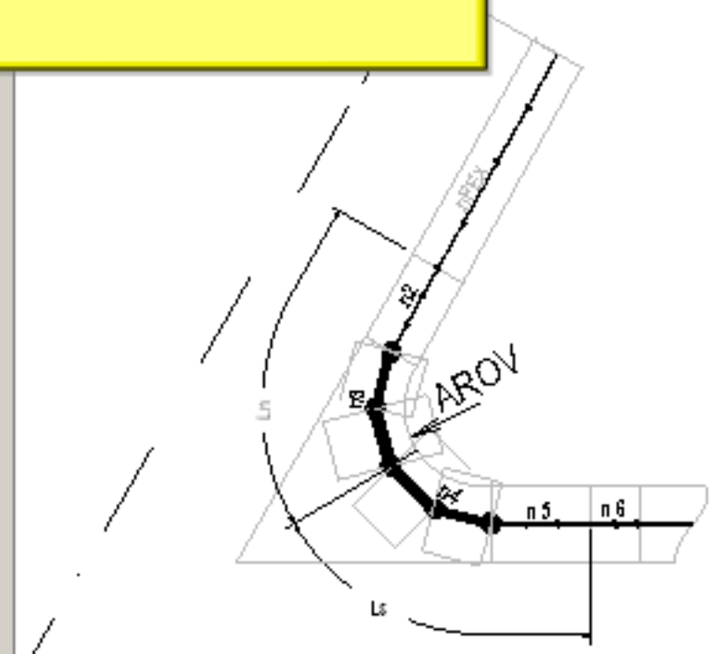

Calculation output | Output of storing, loading ...

11:18:14 END FESU Total Time dt= 0.6

ROHR2 31.0 beta - FESU - [I:\Schul+Präsentation\Tutorials\English\FESU\Tank_Torispherical-head_with_nozzle\Step_0\sub_001.r2fesu]

File Edit Properties Results Documentation View Options Window Help

F1 for Help | PA=0.0bar TA=0°C | 0, 0, 0

Input | Model | Result

Intersection

Name: I1

Superelement: S2 is intersected with jacket: J1

Type of intersection

(•) Nozzle ( ) Trunion ( ) Bore

Fillet on the surface (AROV): 0 mm

Factor for add. thickness at sharp-edged intersection: 0

Scaling factor for with ln (analysis region on the nozzle): 1

Scaling factor for with ls (analysis region on the jacket): 1

Distribution in the region of the intersection

Region	n0	n1	n2	n3	n4	n5	n6	n7
No. of elements	3	0	3	3	3	11	2	0

Type of internal projection

(•) No internal projection
( ) Parallel to intersection line
( ) Orthogonal to the nozzle

Length of the internal projection: 0 mm

Reinforcing pad

[ ] with reinforcing pad Type of model: ( ) single-shell (•) double-shell

Width of the reinforcing pad (AKrag): 0 mm

Thickness of the reinforcing pad: 0 mm

No. of elements on the reinforcing pad (nFEK): 0

Material:

OK Default

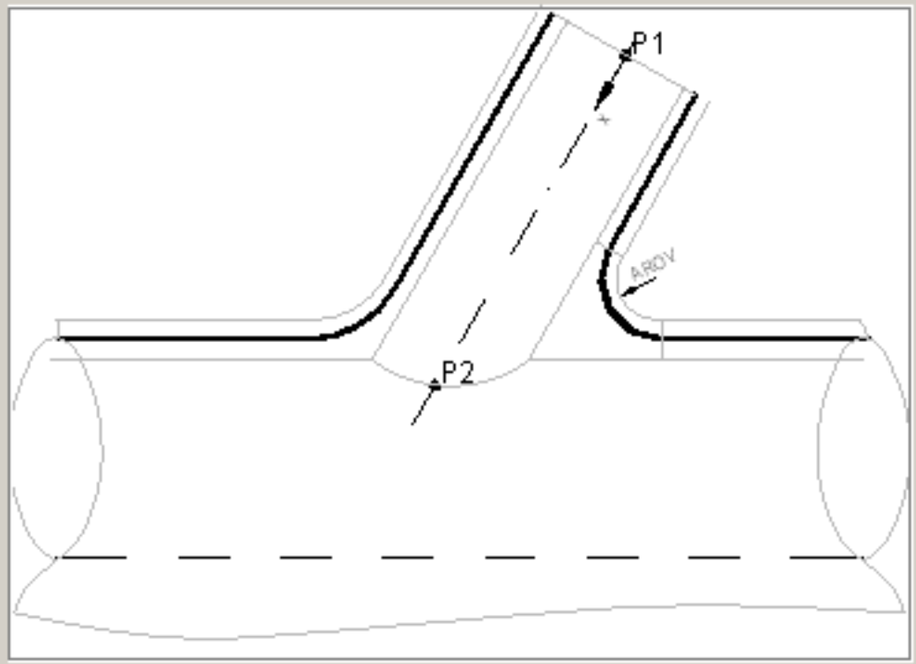

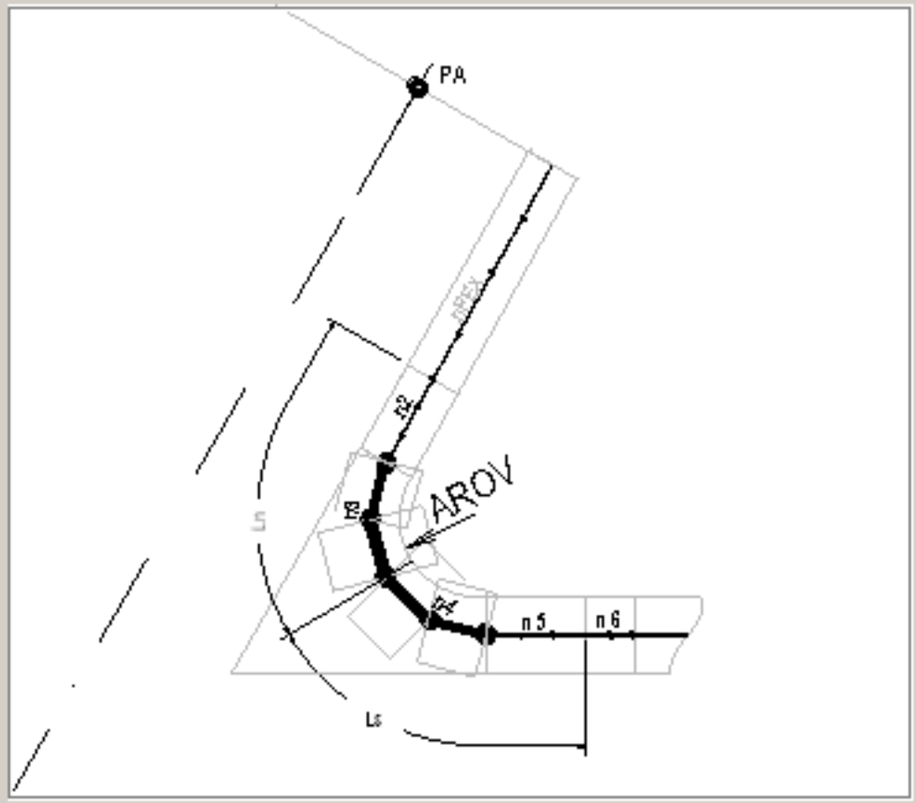

Calculation output | Output of storing, loading ...

11:18:14 END FESU Total Time dt= 0.6

ROHR2 31.0 beta - FESU - [I:\Schul+Präsentation\Tutorials\English\FESU\Tank_Torispherical-head_with_nozzle\Step_0\sub_001.r2fesu*]

File Edit Properties Results Documentation View Options Window Help

F1 for Help | PA=0.0bar TA=0°C | 0, 0, 0

Input | Model | Result

Txt
Txt
Txt
Bmp
Meta file
HP GL

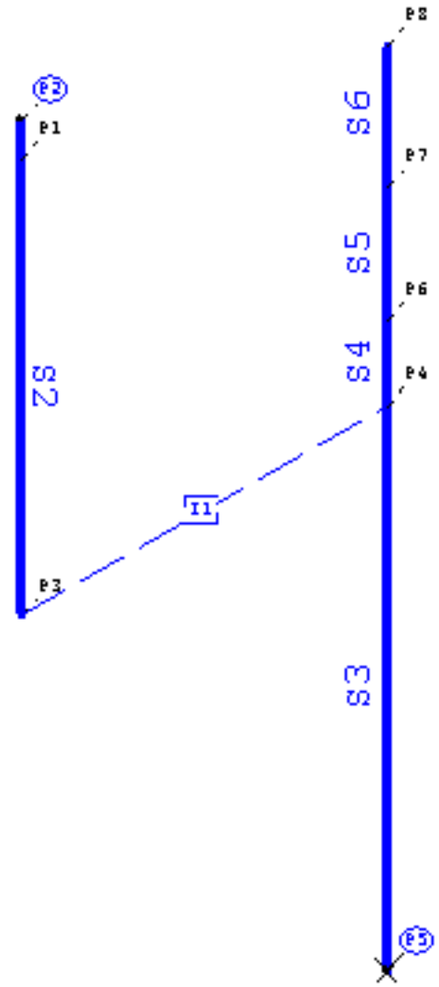

Calculation output | Output of storing, loading ...

11:18:14 END FESU Total Time dt= 0.6

Za
Ya
Xa

ROHR2 31.0 beta - FESU - [I:\Schul+Präsentation\Tutorials\English\FESU\Tank_Torispherical-head_with_nozzle\Step_0\sub_001.r2fesu*]

File Edit Properties Results Documentation View Options Window Help

PA=0.0bar TA=0°C | 0, 0, 0

Input | Model

Regenerate the mesh

Txt
Txt
Txt
Bmp
Meta file
HP GL

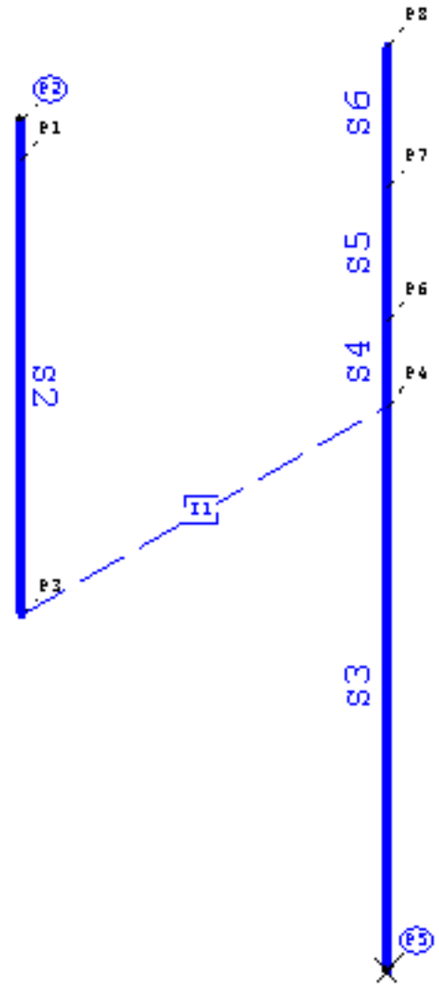

Calculation output | Output of storing, loading ...

11:18:14 END FESU Total Time dt= 0.6

Za
Ya
Xa

ROHR2 31.0 beta - FESU - [I:\Schul+Präsentation\Tutorials\English\FESU\Tank_Torispherical-head_with_nozzle\Step_0\sub_001.r2fesu]

File Edit Properties Results Documentation View Options Window Help

Close FE model and return to beam model

PA=0.0bar TA=0°C

0, 0, 0

Input Model

Return to beam model

Now the mesh quality looks good.

You have tognererate a new stress analysis in ROHR2 to calculate the FE-Model.

Additionally you must assign the operating data to the substructure

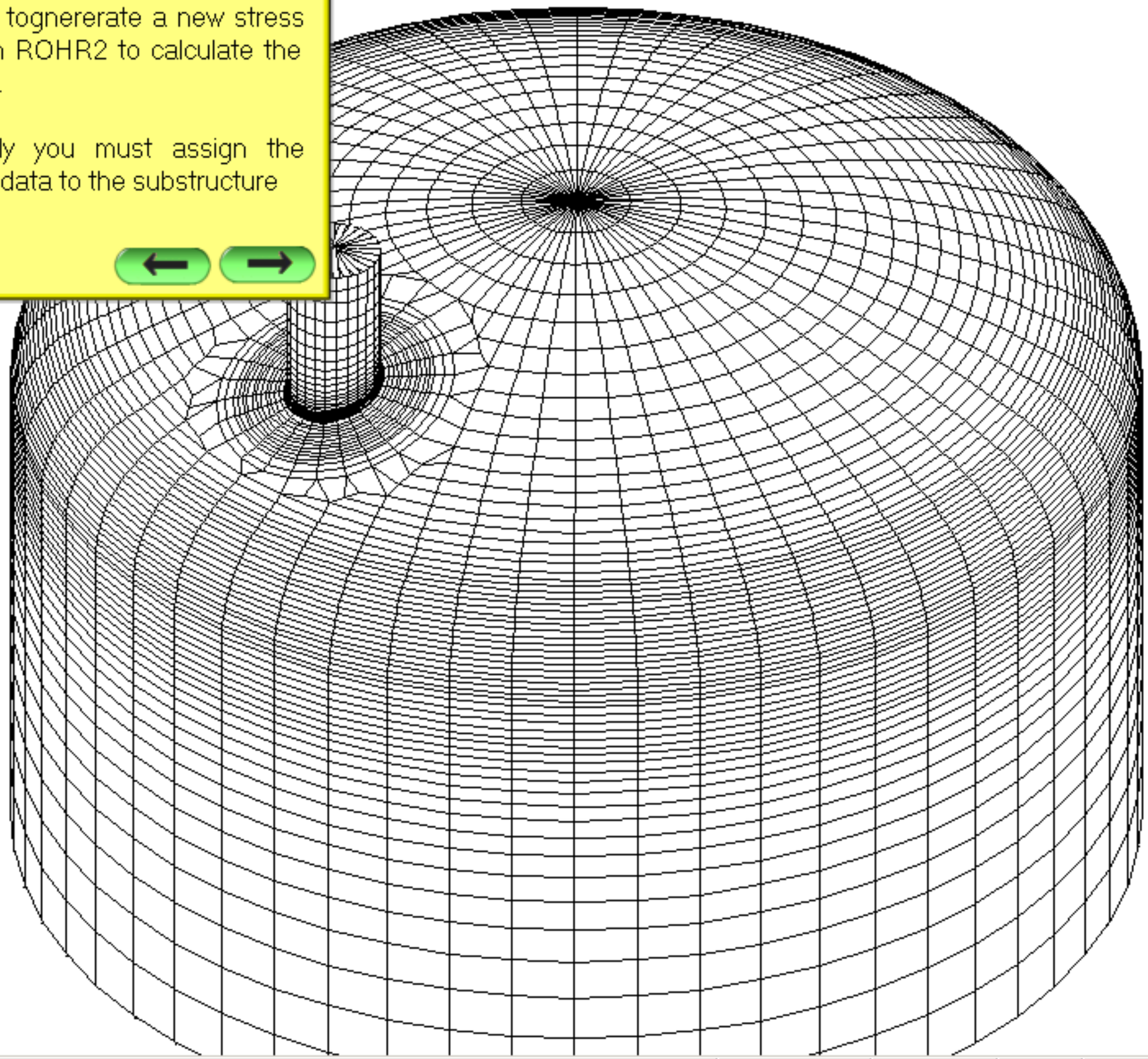

Calculation output | Output of storing, loading ...

11:18:42 END FESU Total Time dt= 0.5

ROHR2 31.0 beta - Dynamic - [I:\Schul+Präsentation\Tutorials\English\FESU\Tank_Torispherical-head_with_nozzle\Step_0\Step_0.r2w*]

File Edit Properties Loads Results Documentation View Isometry Options Extras Window Help SIGMA

F1 for Help

DN150.0 ST35.8 PA=16.0bar TA=200°C

0, 0, 0

Input Result Isometry

DN150.0

Gewicht

Lc

Txt Txt Txt Bmp Meta file HP GL

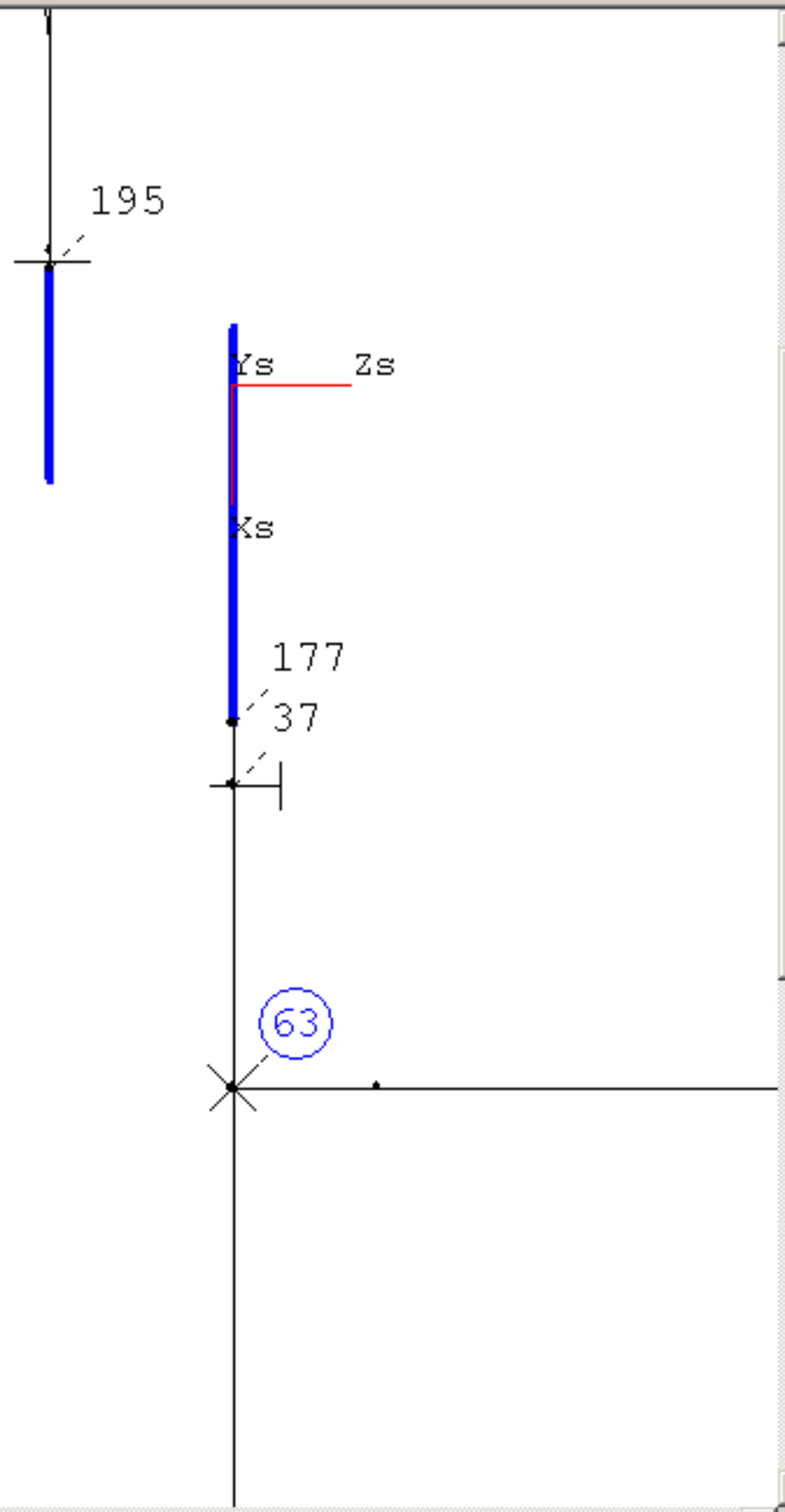

Calculation output | Output of storing, loading ...

Ready!

Za
Ya Xa

5°

ROHR2 31.0 beta - Dynamic - [I:\Schul+Präsentation\Tutorials\English\FESU\Tank_Torispherical-head_with_nozzle\Step_0\Step_0.r2w*]

File Edit Properties Loads Results Documentation View Isometry Options Extras Window Help SIGMA

F1 for Help

PA=16.0bar TA=200°C

0, 0, 0

Input Result Isometry

Gewicht

Click on select

195

Ys Zs

Xs

177

37

63

Calculation output Output of storing, loading ...

Ready!

Za

Ya Xa

ROHR2 31.0 beta - Dynamic - [I:\Schul+Präsentation\Tutorials\English\FESU\Tank_Torispherical-head_with_nozzle\Step_0\Step_0.r2w*]

File Edit Properties Loads Results Documentation View Isometry Options Extras Window Help SIGMA

Select individual objects

DN150.0 ST35.8 PA=16.0bar TA=200°C

0, 0, 0

Input Result Isometry

DN150.0

Gewicht

Lc

Individual elements
Start to end node
Lines
Pipelines
Window
All

Sections for superposition
Sections for fluid hammer plot

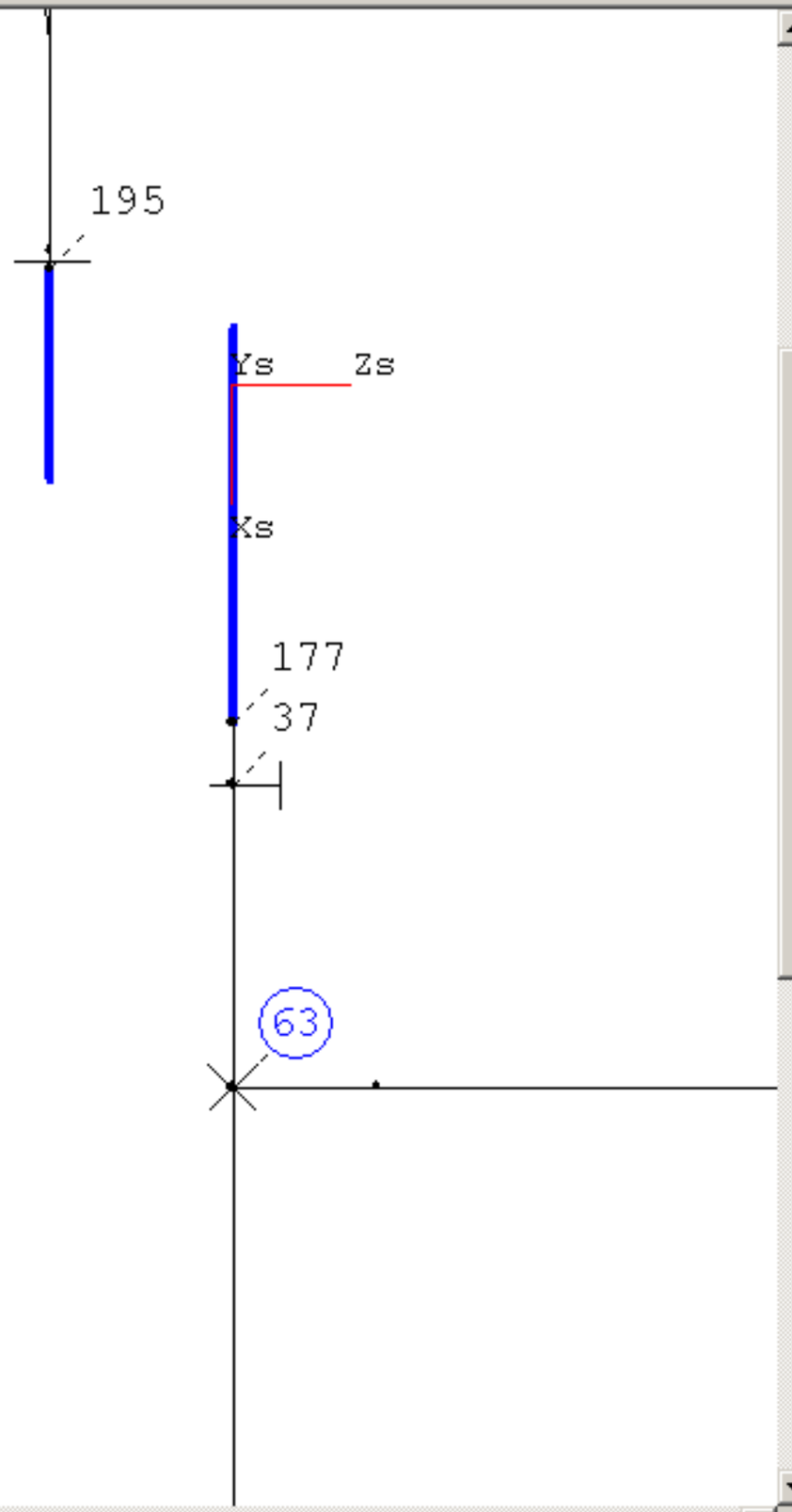

Calculation output | Output of storing, loading ...

Ready!

Za
Ya Xa

ROHR2 31.0 beta - Dynamic - [I:\Schul+Präsentation\Tutorials\English\FESU\Tank_Torispherical-head_with_nozzle\Step_0\Step_0.r2w*]

File Edit Properties Loads Results Documentation View Isometry Options Extras Window Help SIGMA

Select individual objects | DN150.0 ST35.8 PA=16.0bar TA=200°C | 0, 0, 0

Input Result Isometry | DN150.0 | Gewicht | Lc | Tp

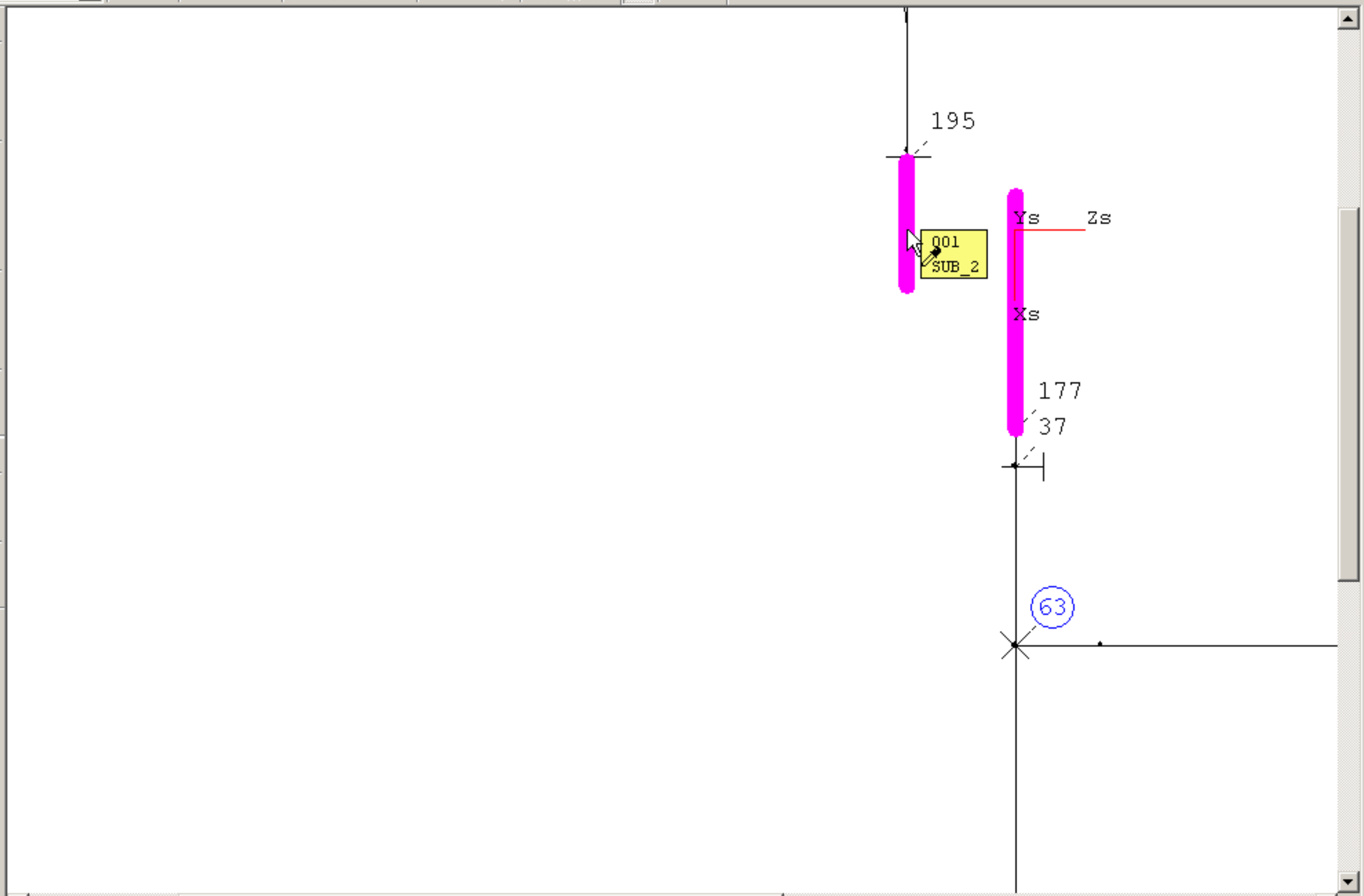

Calculation output | Output of storing, loading ...

Ready!

Za
Ya Xa

ROHR2 31.0 beta - Dynamic - [I:\Schul+Präsentation\Tutorials\English\FESU\Tank_Torispherical-head_with_nozzle\Step_0\Step_0.r2w*]

File Edit Properties Loads Results Documentation View Isometry Options Extras Window Help SIGMA

Select individual objects | DN150.0 ST35.8 PA=16.0bar TA=200°C | 0, 0, 0

Input Result Isometry | DN150.0 | Gewicht | Lc | Tp

and select the substructure

195

001
SUB_2

Ys Zs

Xs

177

37

63

Calculation output | Output of storing, loading ...

Ready!

Za
Ya Xa

ROHR2 31.0 beta - Dynamic - [I:\Schul+Präsentation\Tutorials\English\FESU\Tank_Torispherical-head_with_nozzle\Step_0\Step_0.r2w*]

File Edit Properties Loads Results Documentation View Isometry Options Extras Window Help SIGMA

Assign operation data (pressure, temperature, density of medium)

DN150.0 ST35.8 PA=16.0bar TA=200°C

0, 0, 0

Input Result Isometry

DN150.0

Gewicht

Lc

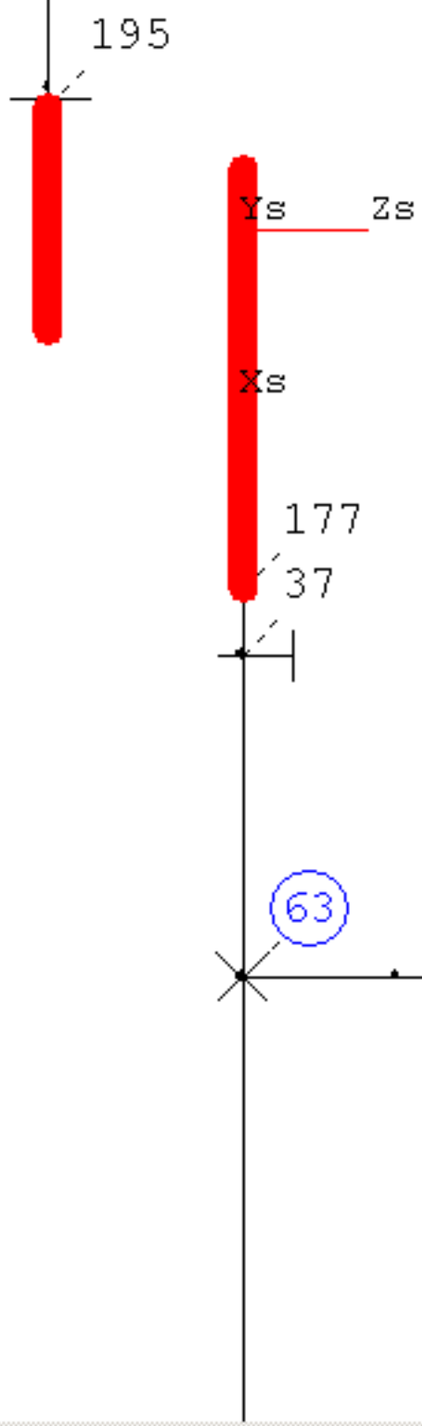

Calculation output

Output of storing, loading ...

Ready!

Za

Ya Xa

ROHR2 31.0 beta - Dynamic - [I:\Schul+Präsentation\Tutorials\English\FESU\Tank_Torispherical-head_with_nozzle\Step_0\Step_0.r2w*]

File Edit Properties Loads Results Documentation View Isometry Options Extras Window Help SIGMA

F1 for Help

DN150.0 ST35.8 PA=16.0bar TA=200°C

0, 0, 0

Input Result Isometry

DN150.0

Gewicht Lc

195

Operation data - Load case Gewicht

Pressure P0	Temp...	Densi...	from L...
16.00 bar	200.0 ...	0.0 kg...	
0.00 bar	200.0 ...	0.0 kg...	

Assign

Close

Edit list

Add Edit Delete Copy

Design data Save Print

Calculation output | Output of storing, loading ...

Ready !

Za Ya Xa

ROHR2 31.0 beta - Dynamic - [I:\Schul+Präsentation\Tutorials\English\FESU\Tank_Torispherical-head_with_nozzle\Step_0\Step_0.r2w*]

File Edit Properties Loads Results Documentation View Isometry Options Extras Window Help SIGMA

F1 for Help

DN150.0 ST35.8 PA=16.0bar TA=200°C

0, 0, 0

Input Result Isometry

DN150.0

Gewicht

Lc

195

Operation data - Load case Gewicht

Pressure P0	Temp...	Densi...	from L...
16.00 bar	200.0 ...	0.0 kg...	
0.00 bar	200.0 ...	0.0 kg...	

Assign

Close

Edit list

Add Edit Delete Copy

Design data Save Print

Calculation output | Output of storing, loading ...

Ready !

Za

Ya Xa

ROHR2 31.0 beta - Dynamic - [I:\Schul+Präsentation\Tutorials\English\FESU\Tank_Torispherical-head_with_nozzle\Step_0\Step_0.r2w*]

File Edit Properties Loads Results Documentation View Isometry Options Extras Window Help SIGMA

F1 for Help

DN150.0 ST35.8 PA=16.0bar TA=200°C

0, 0, 0

Input Result Isometry

DN150.0

Gewicht

Lc

195

Operation data - Load case Gewicht

Pressure P0	Temp...	Densi...	from L...
16.00 bar	200.0 ...	0.0 kg...	
0.00 bar	200.0 ...	0.0 kg...	

Edit list

Assign

Add Edit Delete Copy

Close

Design data Save Print

Calculation output

Output of storing, loading ...

Ready !

Za

Ya Xa

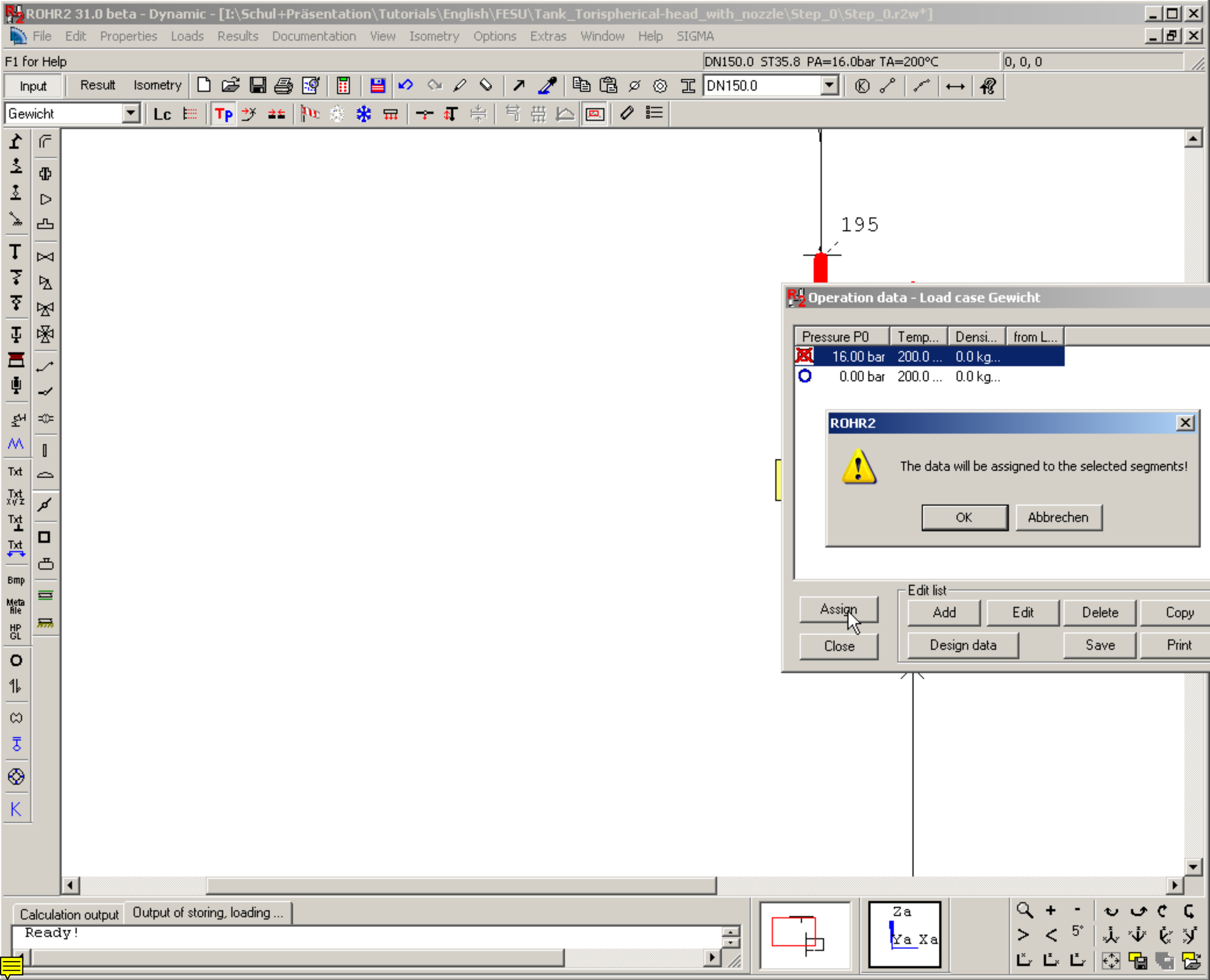
ROHR2 31.0 beta - Dynamic - [I:\Schul+Präsentation\Tutorials\English\FESU\Tank_Torispherical-head_with_nozzle\Step_0\Step_0.r2w*]
File Edit Properties Loads Results Documentation View Isometry Options Extras Window Help SIGMA
F1 for Help
DN150.0 ST35.8 PA=16.0bar TA=200°C
0, 0, 0
Input Result Isometry
DN150.0
Gewicht
195
Operation data - Load case Gewicht
Pressure P0 Temp... Densi... from L...
16.00 bar 200.0 ... 0.0 kg...
0.00 bar 200.0 ... 0.0 kg...
ROHR2
The data will be assigned to the selected segments!
OK
Abbrechen
Edit list
Assign
Add
Edit
Delete
Copy
Close
Design data
Save
Print
Calculation output
Output of storing, loading ...
Ready!

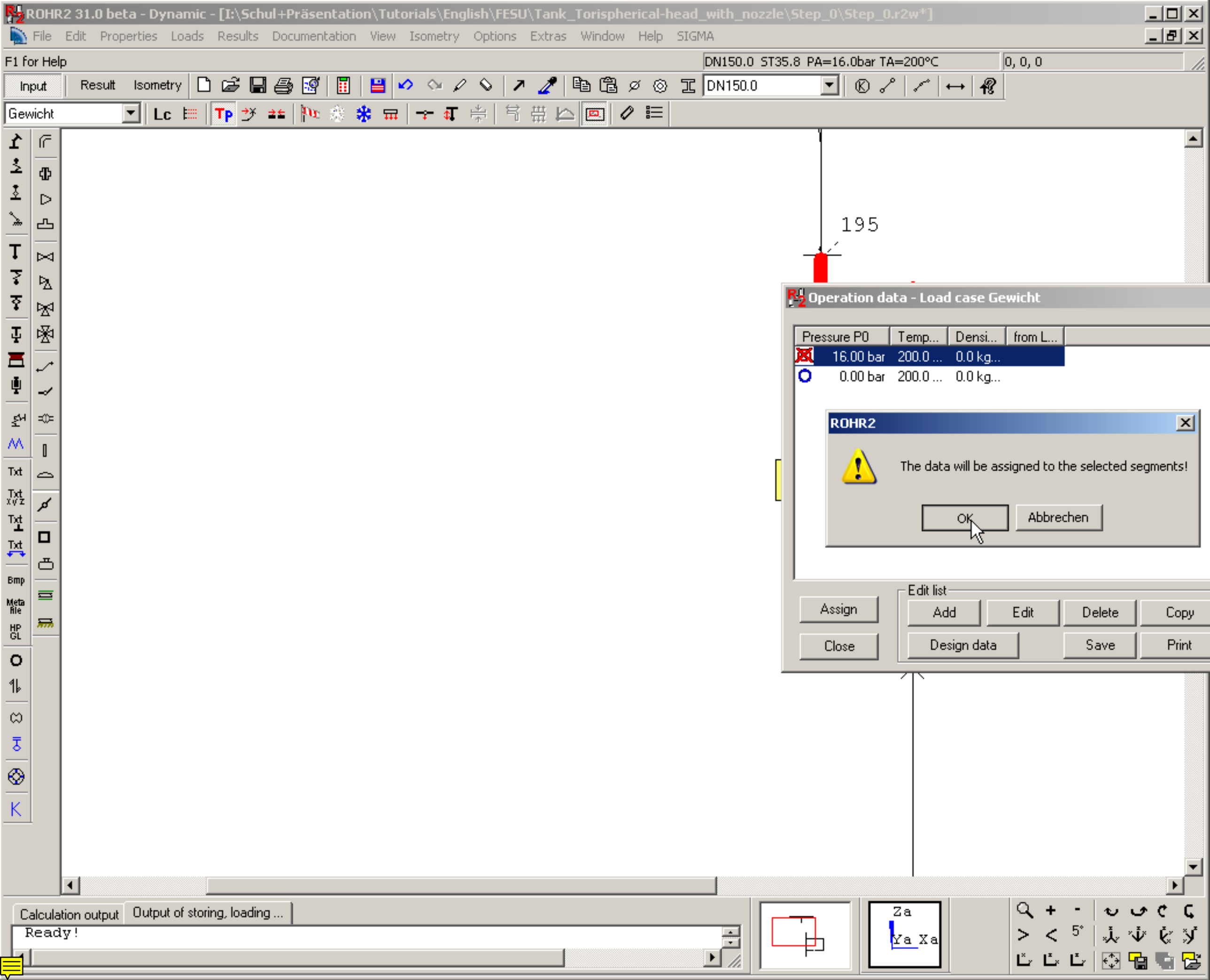
ROHR2 31.0 beta - Dynamic - [I:\Schul+Präsentation\Tutorials\English\FESU\Tank_Torispherical-head_with_nozzle\Step_0\Step_0.r2w*]
File Edit Properties Loads Results Documentation View Isometry Options Extras Window Help SIGMA
F1 for Help
DN150.0 ST35.8 PA=16.0bar TA=200°C
0, 0, 0
Input Result Isometry
DN150.0
Gewicht
195
Operation data - Load case Gewicht
Pressure P0 Temp... Densi... from L...
16.00 bar 200.0 ... 0.0 kg...
0.00 bar 200.0 ... 0.0 kg...
ROHR2
The data will be assigned to the selected segments!
OK
Abbrechen
Edit list
Assign
Add
Edit
Delete
Copy
Close
Design data
Save
Print
Calculation output
Output of storing, loading ...
Ready!

ROHR2 31.0 beta - Dynamic - [I:\Schul+Präsentation\Tutorials\English\FESU\Tank_Torispherical-head_with_nozzle\Step_0\Step_0.r2w*]

File Edit Properties Loads Results Documentation View Isometry Options Extras Window Help SIGMA

F1 for Help

DN150.0 ST35.8 PA=16.0bar TA=200°C

0, 0, 0

Input Result Isometry

DN150.0

Gewicht

Lc

195

Operation data - Load case Gewicht

Pressure P0	Temp...	Densi...	from L...
16.00 bar	200.0 ...	0.0 kg...	
0.00 bar	200.0 ...	0.0 kg...	

Assign

Close

Edit list

Add Edit Delete Copy

Design data Save Print

Txt Txt XYZ Txt Txt Bmp Meta file HP GL

Calculation output

Output of storing, loading ...

Ready !

Za

Ya Xa

ROHR2 31.0 beta - Dynamic - [I:\Schul+Präsentation\Tutorials\English\FESU\Tank_Torispherical-head_with_nozzle\Step_0\Step_0.r2w*]

File Edit Properties Loads Results Documentation View Isometry Options Extras Window Help SIGMA

F1 for Help

DN150.0 ST35.8 PA=16.0bar TA=200°C

0, 0, 0

Input Result Isometry

DN150.0

Gewicht

Lc

195

Operation data - Load case Gewicht

Pressure P0	Temp...	Densi...	from L...
16.00 bar	200.0 ...	0.0 kg...	
0.00 bar	200.0 ...	0.0 kg...	

Assign

Close

Edit list

Add Edit Delete Copy

Design data Save Print

Calculation output

Output of storing, loading ...

Ready !

Za

Ya Xa

ROHR2 31.0 beta - Dynamic - [I:\Schul+Präsentation\Tutorials\English\FESU\Tank_Torispherical-head_with_nozzle\Step_0\Step_0.r2w*]

File Edit Properties Loads Results Documentation View Isometry Options Extras Window Help SIGMA

Load cases | DN150.0 ST35.8 PA=16.0bar TA=200°C | 0, 0, 0

Input | Result | Isometry | DN150.0

Gewicht

Gewicht
Betrieb

195

Operation data - Load case Gewicht

Pressure P0	Temp...	Densi...	from L...
16.00 bar	200.0 ...	0.0 kg...	
0.00 bar	200.0 ...	0.0 kg...	

Assign
Close

Edit list
Add | Edit | Delete | Copy
Design data | Save | Print

Calculation output | Output of storing, loading ...

Ready !

Za
Ya Xa

ROHR2 31.0 beta - Dynamic - [I:\Schul+Präsentation\Tutorials\English\FESU\Tank_Torispherical-head_with_nozzle\Step_0\Step_0.r2w*]

File Edit Properties Loads Results Documentation View Isometry Options Extras Window Help SIGMA

F1 for Help

DN150.0 ST35.8 PA=16.0bar TA=200°C

0, 0, 0

Input Result Isometry

DN150.0

Gewicht

Gewicht
Betrieb

195

Operation data - Load case Gewicht

Pressure P0	Temp...	Densi...	from L...
16.00 bar	200.0 ...	0.0 kg...	
0.00 bar	200.0 ...	0.0 kg...	

Edit list

Assign
Close
Add
Edit
Delete
Copy
Design data
Save
Print

Calculation output
Output of storing, loading ...

Ready!

Za
Ya Xa

ROHR2 31.0 beta - Dynamic - [I:\Schul+Präsentation\Tutorials\English\FESU\Tank_Torispherical-head_with_nozzle\Step_0\Step_0.r2w*]

File Edit Properties Loads Results Documentation View Isometry Options Extras Window Help SIGMA

F1 for Help

DN150.0 ST35.8 PA=16.0bar TA=200°C

0, 0, 0

Input Result Isometry

DN150.0

Betrieb

Lc

195

Operation data - Load case Betrieb

Pressure P0	Temp...	Densi...	from L...
16.00 bar	200.0 ...	0.0 kg...	
0.00 bar	200.0 ...	0.0 kg...	

Edit list

Assign

Add Edit Delete Copy

Close

Design data Save Print

Calculation output

Output of storing, loading ...

Ready!

Za

Ya Xa

ROHR2 31.0 beta - Dynamic - [I:\Schul+Präsentation\Tutorials\English\FESU\Tank_Torispherical-head_with_nozzle\Step_0\Step_0.r2w*]

File Edit Properties Loads Results Documentation View Isometry Options Extras Window Help SIGMA

F1 for Help

DN150.0 ST35.8 PA=16.0bar TA=200°C

0, 0, 0

Input Result Isometry

DN150.0

Betrieb

Lc

195

Operation data - Load case Betrieb

Pressure P0	Temp...	Densi...	from L...
16.00 bar	200.0 ...	0.0 kg...	
0.00 bar	200.0 ...	0.0 kg...	

Assign

Close

Edit list

Add Edit Delete Copy

Design data Save Print

Txt Txt XYZ Txt Txt Bmp Meta file HP GL

Calculation output

Output of storing, loading ...

Ready !

Za

Ya Xa

ROHR2 31.0 beta - Dynamic - [I:\Schul+Präsentation\Tutorials\English\FESU\Tank_Torispherical-head_with_nozzle\Step_0\Step_0.r2w*]

File Edit Properties Loads Results Documentation View Isometry Options Extras Window Help SIGMA

F1 for Help

DN150.0 ST35.8 PA=16.0bar TA=200°C

0, 0, 0

Input Result Isometry

DN150.0

Betrieb

Lc

195

Operation data - Load case Betrieb

Pressure P0	Temp...	Densi...	from L...
16.00 bar	200.0 ...	0.0 kg...	
0.00 bar	200.0 ...	0.0 kg...	

Edit list

Assign

Add Edit Delete Copy

Close

Design data Save Print

Calculation output

Output of storing, loading ...

Ready !

Za

Ya Xa

ROHR2 31.0 beta - Dynamic - [I:\Schul+Präsentation\Tutorials\English\FESU\Tank_Torispherical-head_with_nozzle\Step_0\Step_0.r2w*]

File Edit Properties Loads Results Documentation View Isometry Options Extras Window Help SIGMA

F1 for Help

DN150.0 ST35.8 PA=16.0bar TA=200°C

0, 0, 0

Input Result Isometry

DN150.0

Betrieb

Lc

195

Operation data - Load case Betrieb

Pressure P0	Temp...	Densi...	from L...
16.00 bar	200.0 ...	0.0 kg...	
0.00 bar	200.0 ...	0.0 kg...	

Edit list

Assign Add Edit Delete Copy

Close Design data Save Print

Calculation output | Output of storing, loading ...

Ready !

Za Ya Xa

ROHR2 31.0 beta - Dynamic - [I:\Schul+Präsentation\Tutorials\English\FESU\Tank_Torispherical-head_with_nozzle\Step_0\Step_0.r2w*]

File Edit Properties Loads Results Documentation View Isometry Options Extras Window Help SIGMA

F1 for Help

DN150.0 ST35.8 PA=16.0bar TA=200°C

0, 0, 0

Input Result Isometry

DN150.0

Betrieb

Lc

195

Operation data - Load case Betrieb

Pressure P0	Temp...	Densi...	from L...
16.00 bar	200.0 ...	0.0 kg...	
0.00 bar	200.0 ...	0.0 kg...	

ROHR2

The data will be assigned to the selected segments!

OK Abbrechen

Assign

Close

Edit list

Add Edit Delete Copy

Design data Save Print

Calculation output | Output of storing, loading ...

Ready!

Za

Ya Xa

ROHR2 31.0 beta - Dynamic - [I:\Schul+Präsentation\Tutorials\English\FESU\Tank_Torispherical-head_with_nozzle\Step_0\Step_0.r2w*]

File Edit Properties Loads Results Documentation View Isometry Options Extras Window Help SIGMA

F1 for Help

DN150.0 ST35.8 PA=16.0bar TA=200°C

0, 0, 0

Input Result Isometry

DN150.0

Betrieb

Lc

195

Operation data - Load case Betrieb

Pressure P0	Temp...	Densi...	from L...
16.00 bar	200.0 ...	0.0 kg...	
0.00 bar	200.0 ...	0.0 kg...	

ROHR2

The data will be assigned to the selected segments!

OK Abbrechen

Assign

Close

Edit list

Add Edit Delete Copy

Design data Save Print

Txt Txt Txt Bmp Meta file HP GL

Calculation output | Output of storing, loading ...

Ready!

Za Ya Xa

5°

ROHR2 31.0 beta - Dynamic - [I:\Schul+Präsentation\Tutorials\English\FESU\Tank_Torispherical-head_with_nozzle\Step_0\Step_0.r2w*]

File Edit Properties Loads Results Documentation View Isometry Options Extras Window Help SIGMA

F1 for Help

DN150.0 ST35.8 PA=16.0bar TA=200°C

0, 0, 0

Input Result Isometry

DN150.0

Betrieb

Lc

195

Operation data - Load case Betrieb

Pressure P0	Temp...	Densi...	from L...
16.00 bar	200.0 ...	0.0 kg...	
0.00 bar	200.0 ...	0.0 kg...	

Edit list

Assign

Add Edit Delete Copy

Close

Design data Save Print

Calculation output | Output of storing, loading ...

Ready!

Za Ya Xa

ROHR2 31.0 beta - Dynamic - [I:\Schul+Präsentation\Tutorials\English\FESU\Tank_Torispherical-head_with_nozzle\Step_0\Step_0.r2w*]

File Edit Properties Loads Results Documentation View Isometry Options Extras Window Help SIGMA

F1 for Help

DN150.0 ST35.8 PA=16.0bar TA=200°C

0, 0, 0

Input Result Isometry

DN150.0

Betrieb

Lc

195

Operation data - Load case Betrieb

Pressure P0	Temp...	Densi...	from L...
16.00 bar	200.0 ...	0.0 kg...	
0.00 bar	200.0 ...	0.0 kg...	

Edit list

Assign

Add Edit Delete Copy

Close

Design data Save Print

Calculation output

Output of storing, loading ...

Ready !

Za

Ya Xa

ROHR2 31.0 beta - Dynamic - [I:\Schul+Präsentation\Tutorials\English\FESU\Tank_Torispherical-head_with_nozzle\Step_0\Step_0.r2w*]

File Edit Properties Loads Results Documentation View Isometry Options Extras Window Help SIGMA

F1 for Help

DN150.0 ST35.8 PA=16.0bar TA=200°C

0, 0, 0

Input Result Isometry

DN150.0

Betrieb

Lc

Txt Txt Bmp Meta file HP GL

195

Ys Zs

Xs

177

37

63

Calculation output Output of storing, loading ...

Ready!

Za

Ya Xa

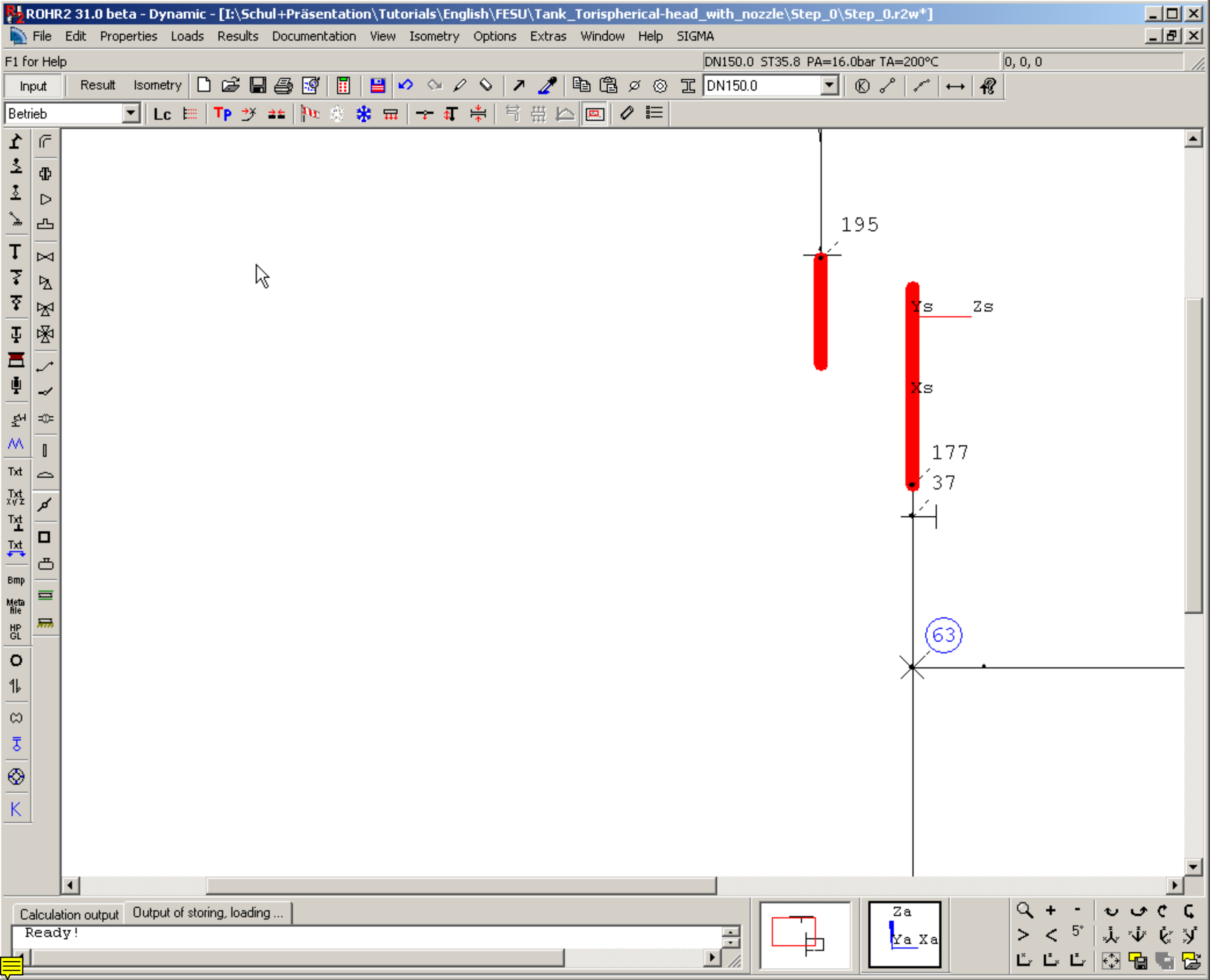
ROHR2 31.0 beta - Dynamic - [I:\Schul+Präsentation\Tutorials\English\FESU\Tank_Torispherical-head_with_nozzle\Step_0\Step_0.r2w*]
File Edit Properties Loads Results Documentation View Isometry Options Extras Window Help SIGMA
F1 for Help
DN150.0 ST35.8 PA=16.0bar TA=200°C
0, 0, 0
Input Result Isometry
DN150.0
Betrieb
195
Ys
Zs
Xs
177
37
63
Calculation output
Output of storing, loading ...
Ready!
Za
Ya Xa

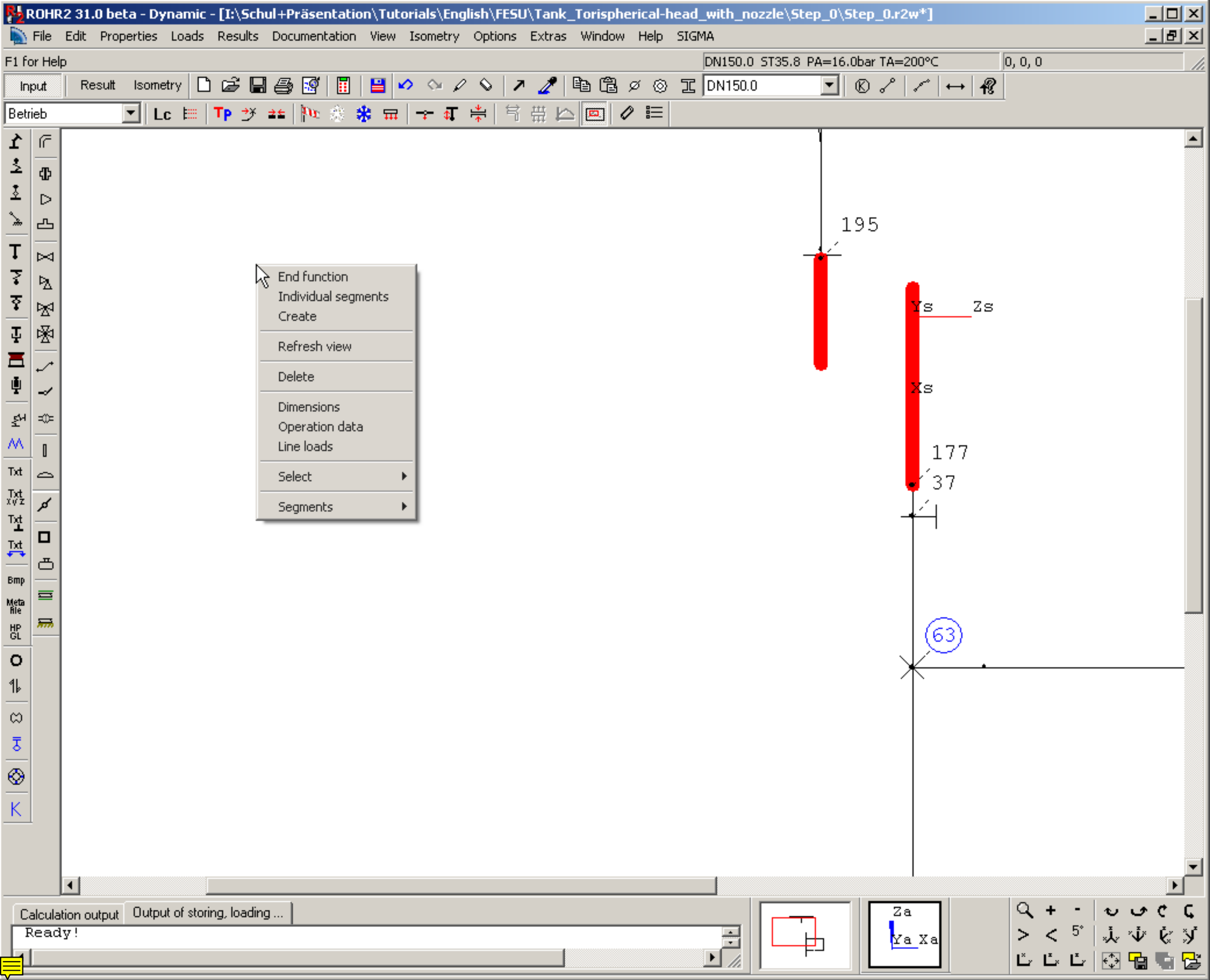
ROHR2 31.0 beta - Dynamic - [I:\Schul+Präsentation\Tutorials\English\FESU\Tank_Torispherical-head_with_nozzle\Step_0\Step_0.r2w*]
File Edit Properties Loads Results Documentation View Isometry Options Extras Window Help SIGMA
F1 for Help
DN150.0 ST35.8 PA=16.0bar TA=200°C
0, 0, 0
Input Result Isometry
DN150.0
Betrieb
End function
Individual segments
Create
Refresh view
Delete
Dimensions
Operation data
Line loads
Select
Segments
195
Ys
Zs
Xs
177
37
63
Calculation output
Output of storing, loading ...
Ready!
Za
Ya Xa

ROHR2 31.0 beta - Dynamic - [I:\Schul+Präsentation\Tutorials\English\FESU\Tank_Torispherical-head_with_nozzle\Step_0\Step_0.r2w*]

File Edit Properties Loads Results Documentation View Isometry Options Extras Window Help SIGMA

End function and refresh view | DN150.0 ST35.8 PA=16.0bar TA=200°C | 0, 0, 0

Input Result Isometry | DN150.0 | Betrieb | Lc | Tp

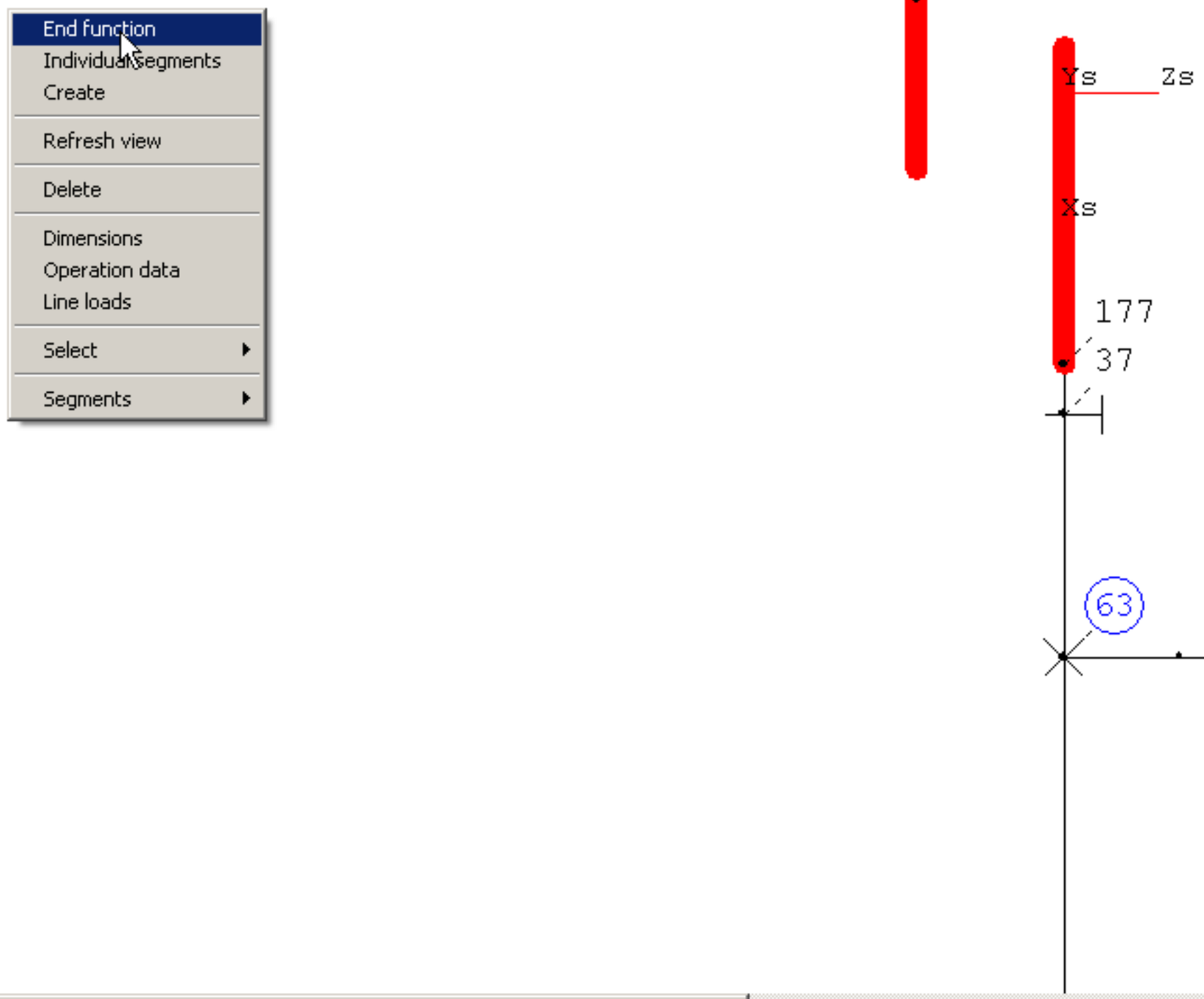

Calculation output | Output of storing, loading ...

Ready!

Za Ya Xa

ROHR2 31.0 beta - Dynamic - [I:\Schul+Präsentation\Tutorials\English\FESU\Tank_Torispherical-head_with_nozzle\Step_0\Step_0.r2w*]

File Edit Properties Loads Results Documentation View Isometry Options Extras Window Help SIGMA

F1 for Help

DN150.0 ST35.8 PA=16.0bar TA=200°C

0, 0, 0

Input Result Isometry

DN150.0

Betrieb Lc

Edit the ROHR2-tasks

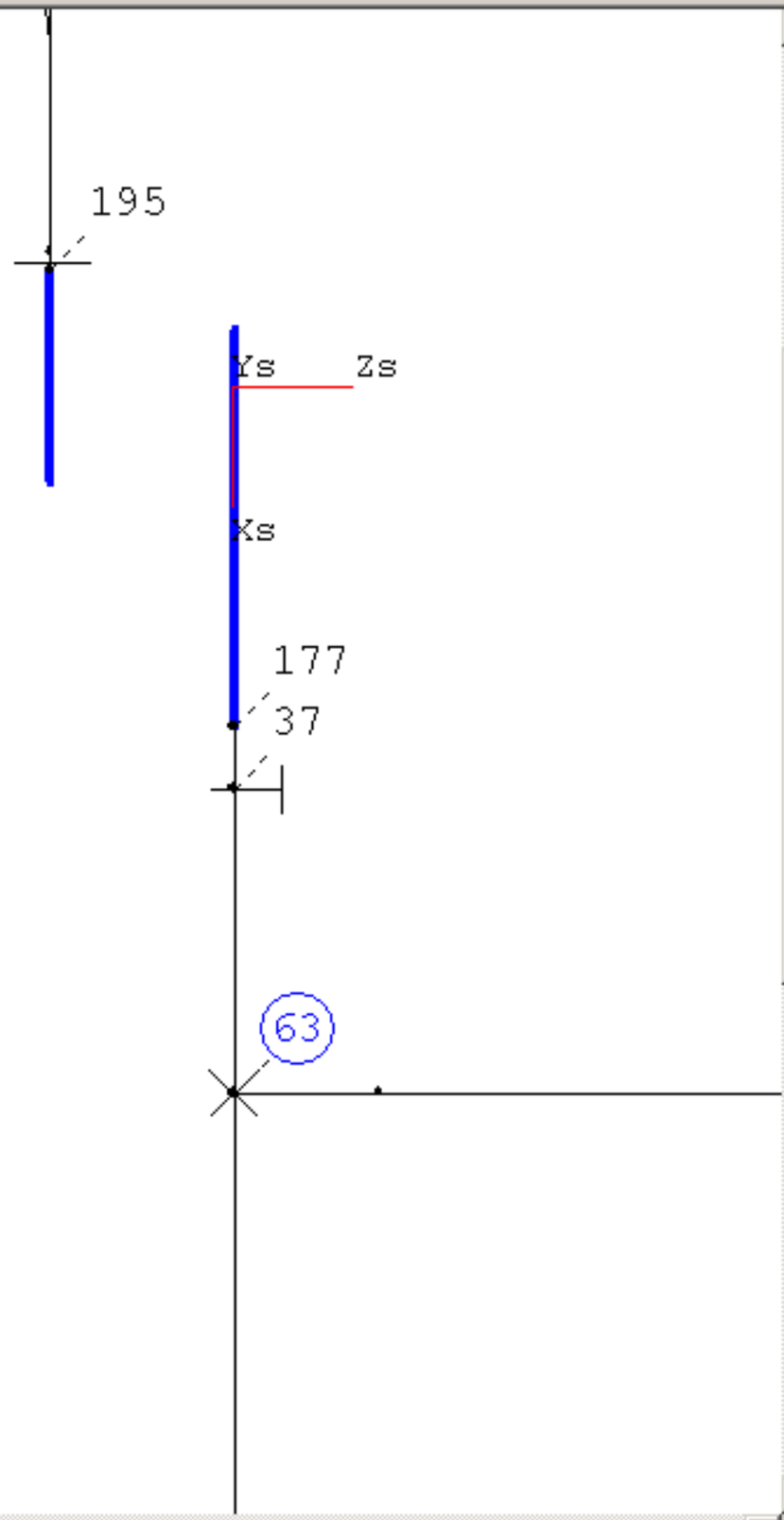

Calculation output | Output of storing, loading ...

Ready!

Za
Ya Xa

ROHR2 31.0 beta - Dynamic - [I:\Schul+Präsentation\Tutorials\English\FESU\Tank_Torispherical-head_with_nozzle\Step_0\Step_0.r2w*]

File Edit Properties Loads Results Documentation View Isometry Options Extras Window Help SIGMA

Edit ROHR2 tasks

DN150.0 ST35.8 PA=16.0bar TA=200°C

0, 0, 0

Input Result Isometry

DN150.0

Betrieb

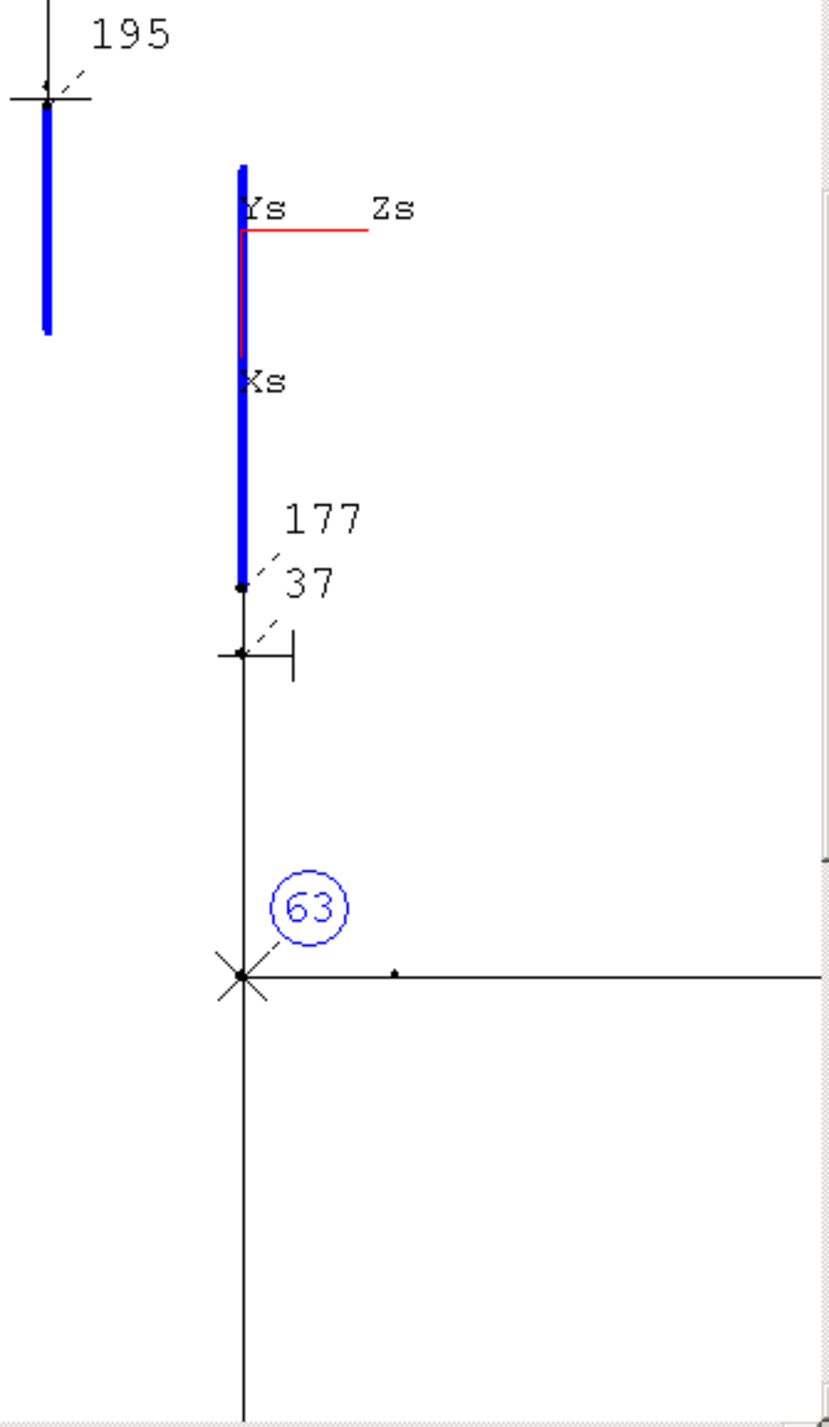

Calculation output

Output of storing, loading ...

Ready!

Za
Ya Xa

ROHR2 31.0 beta - Dynamic - [I:\Schul+Präsentation\Tutorials\English\FESU\Tank_Torispherical-head_with_nozzle\Step_0\Step_0.r2w*]

File Edit Properties Loads Results Documentation View Isometry Options Extras Window Help SIGMA

F1 for Help | DN150.0 ST35.8 PA=16.0bar TA=200°C | 0, 0, 0

Input | Result | Isometry | DN150.0 | Betrieb

ROHR2 tasks - Betrieb

- R Tasks
  - RR Load cases
    - RR1 Gewicht
    - RRN Betrieb
  - RP Plot
  - RS Stress analysis
  - RK Extreme value calculat
  - FED Federauslegung

Load case | Global loads | Friction coefficient factors | Comment | Output file

Description: Betrieb — Input file: Temp1.inp

Category: Secondary loads - Thermal expansion — Type: Normal operating case

Associated reference load case: Gewicht

- [ ] take operation data
- [x] take loads
- [x] take gobal load settings

Calculation

- (•) Theory 1. order ( ) Theory 2. order ( ) Buckling shapes ( ) Sectional results: 0
- [x] Consider nonlinear properties
- [ ] Load case follow-up based on the reference load case
- [ ] Consider influence of deflection on axial expansion

Iteration settings

Settings

- (•) Y modulus at operation temperature ( ) Y modulus at assembly temperature
- [ ] Consider the effect of damper, shock absorber
- [ ] Block all spring hangers/supports and constant hangers/supports
- [x] Consider in stress analysis
- [x] Consider in superposition
- [ ] Consider load case only for load case follow-up

Text:

OK | Cancel | New | Delete | Save as sample | Load sample

Calculation output | Output of storing, loading ...

Ready!

ROHR2 31.0 beta - Dynamic - [I:\Schul+Präsentation\Tutorials\English\FESU\Tank_Torispherical-head_with_nozzle\Step_0\Step_0.r2w*]

File Edit Properties Loads Results Documentation View Isometry Options Extras Window Help SIGMA

F1 for Help | DN150.0 ST35.8 PA=16.0bar TA=200°C | 0, 0, 0

Input | Result | Isometry | DN150.0 | Betrieb | Lc | Tp

ROHR2 tasks - Betrieb

- R Tasks
  - RR Load cases
    - RR1 Gewicht
    - RRN Betrieb
  - RP Plot
  - RS Stress analysis
  - RK Extreme value calculat
  - FED Federauslegung

Load case | Global loads | Friction coefficient factors | Comment | Output file

Description: Betrieb — Input file: Temp1.inp

Category: Secondary loads - Thermal expansion — Type: Normal operating case

Associated reference load case: Gewicht

- [ ] take operation data
- [x] take loads
- [x] take gobal load settings

Calculation

- (•) Theory 1. order ( ) Theory 2. order ( ) Buckling shapes ( ) Sectional results: 0
- [x] Consider nonlinear properties
- [ ] Load case follow-up based on the reference load case
- [ ] Consider influence of deflection on axial expansion

Iteration settings

Settings

- (•) Y modulus at operation temperature ( ) Y modulus at assembly temperature
- [ ] Consider the effect of damper, shock absorber
- [ ] Block all spring hangers/supports and constant hangers/supports
- [x] Consider in stress analysis
- [x] Consider in superposition
- [ ] Consider load case only for load case follow-up

Text:

OK | Cancel | New | Delete | Save as sample | Load sample

Calculation output | Output of storing, loading ...

Ready!

ROHR2 31.0 beta - Dynamic - [I:\Schul+Präsentation\Tutorials\English\FESU\Tank_Torispherical-head_with_nozzle\Step_0\Step_0.r2w*]

File Edit Properties Loads Results Documentation View Isometry Options Extras Window Help SIGMA

F1 for Help | DN150.0 ST35.8 PA=16.0bar TA=200°C | 0, 0, 0

Input | Result | Isometry | DN150.0 | Betrieb | Lc | Tp

ROHR2 tasks - Spannungsanalyse

- Tasks
  - Load cases
  - Plot
  - Stress analysis
    - Spannungsanalys
  - Extreme value calculat
  - Federauslegung

Stress analysis | Superpositions | Equations | Region | Comment | Output file

Description: Spannungsanalyse — Input file: spann.inp

Specification: EN 13480 — System data from lc: Gewicht

Life time (Creep range analysis)
- enter life time: 200000 hours

Load cycles (sec. loads)
- < 7000 — Factor: 1

Settings

Create superpositions and equations automatically	☑
Suppress secondary stress analysis S3	☐
Convert stresses (Ec/Eh)	☑
Consider tolerances with the calculation of the stresses due to internal pressure	☑
Consider tolerances with the calculation of the primary stresses	☑
Consider tolerances with the calculation of the secondary stresses	☑
Use alternative equations (ii*Mi)²+(io*Mo)²+Mt²	☐
Calculation S1,S2 acc. to Rev. 2002 using (ii*Mi)²+(io*Mo)²	☐
Calculate S1,S2 according to Case 178 using (.75ii*Mi)²+(.75io*Mo)²+Mt²	☐
Life time monitoring system	☐
Internal pressure stresses SLP=P*Da/4t according to the code	◉
Internal pressure stresses SLP=P*Di²/(Da²-Di²)+P/2	○
Internal pressure stresses SLP=P*Di²/(Da²-Di²)	○

Text:

OK | Cancel | New | Delete | Save as sample | Load sample

Calculation output | Output of storing, loading ...

Ready!

Za Ya Xa

ROHR2 31.0 beta - Dynamic - [I:\Schul+Präsentation\Tutorials\English\FESU\Tank_Torispherical-head_with_nozzle\Step_0\Step_0.r2w*]

File Edit Properties Loads Results Documentation View Isometry Options Extras Window Help SIGMA

F1 for Help | DN150.0 ST35.8 PA=16.0bar TA=200°C | 0, 0, 0

Input | Result | Isometry | DN150.0 | Betrieb | Lc | Tp

ROHR2 tasks - Spannungsanalyse

- Tasks
  - Load cases
  - Plot
  - Stress analysis
    - Spannungsanalys
  - Extreme value calculat
  - Federauslegung

Stress analysis | Superpositions | Equations | Region | Comment | Output file

Description: Spannungsanalyse — Input file: spann.inp

Specification: EN 13480 — System data from lc: Gewicht

Life time (Creep range analysis): enter life time 200000 hours

Load cycles (sec. loads): < 7000 — Factor 1

Settings

Create superpositions and equations automatically	☑
Suppress secondary stress analysis S3	☐
Convert stresses (Ec/Eh)	☑
Consider tolerances with the calculation of the stresses due to internal pressure	☑
Consider tolerances with the calculation of the primary stresses	☑
Consider tolerances with the calculation of the secondary stresses	☑
Use alternative equations (ii*Mi)²+(io*Mo)²+Mt²	☐
Calculation S1,S2 acc. to Rev. 2002 using (ii*Mi)²+(io*Mo)²	☐
Calculate S1,S2 according to Case 178 using (.75ii*Mi)²+(.75io*Mo)²+Mt²	☐
Life time monitoring system	☐
Internal pressure stresses SLP=P*Da/4t according to the code	◉
Internal pressure stresses SLP=P*Di²/(Da²-Di²)+P/2	○
Internal pressure stresses SLP=P*Di²/(Da²-Di²)	○

Text:

OK | Cancel | New | Delete | Load sample

Create a new stress analysis

Calculation output | Output of storing, loading ...

Ready!

ROHR2 31.0 beta - Dynamic - [I:\Schul+Präsentation\Tutorials\English\FESU\Tank_Torispherical-head_with_nozzle\Step_0\Step_0.r2w*]

File Edit Properties Loads Results Documentation View Isometry Options Extras Window Help SIGMA

F1 for Help | DN150.0 ST35.8 PA=16.0bar TA=200°C | 0, 0, 0

Input | Result | Isometry | DN150.0 | Betrieb | Lc | Tp

ROHR2 tasks - Stress analysis4

- Tasks
  - Load cases
  - Plot
  - Stress analysis
    - Spannungsanalys
    - Stress analysis4
  - Extreme value calculat
  - Federauslegung

Stress analysis | Superpositions | Equations | Region | Comment | Output file

Description: FESU

Input file: spann4.inp

Specification: EN 13480

System data from lc: Gewicht

Life time (Cr

enter l

Load cycles (sec. loads)

< 7000

Factor: 1

Settings

Create supe

Suppress se

Convert stre

Consider tole

Consider tole

Consider tole

Use alternat

Calculation S

Calculate ST

Life time mo

Internal pres

Internal pres

Internal pres

to internal pressure

es

esses

io*Mo]²+Mt²

de

EN 13480
FDBR
Stoomwezen D1101
AGFW FW401
AGFW - 1989
ASME B31.1
ASME B31.3
ASME B31.4
ASME B31.5
ASME B31.8
ISO 14692
BS7159
KRV
UKOOA (obsolete)
WAVISTRONG - Future Pipe (obsolete)
VGLSP - Equivalent stresses SIG-V
VGLSR - Equivalent stresses for pipes
ASME Class 1
ASME Class 2
ASME Class 3
KTA 3201.2
KTA 3211.2 A1
KTA 3211.2 A2/A3
Analysis of substructures acc. to ADS4

Text:

OK | Cancel | New | Delete | Save as sample | Load sample

Calculation output | Output of storing, loading ...

Ready!

Za
Ya Xa

ROHR2 31.0 beta - Dynamic - [I:\Schul+Präsentation\Tutorials\English\FESU\Tank_Torispherical-head_with_nozzle\Step_0\Step_0.r2w*]

File Edit Properties Loads Results Documentation View Isometry Options Extras Window Help SIGMA

F1 for Help | DN150.0 ST35.8 PA=16.0bar TA=200°C | 0, 0, 0

Input | Result | Isometry | DN150.0 | Betrieb | Lc | Tp

ROHR2 tasks - Stress analysis4

- Tasks
  - Load cases
  - Plot
  - Stress analysis
    - Spannungsanalys
    - Stress analysis4
  - Extreme value calculat
  - Federauslegung

Stress analysis | Superpositions | Equations | Region | Comment | Output file

Description: FESU

Input file: spann4.inp

Specification: EN 13480

System data from lc: Gewicht

Life time (Cr

enter l

Load cycles (sec. loads)

< 7000

Factor: 1

Settings

Create supe

Suppress se

Convert stre

Consider tole

Consider tole

Consider tole

Use alternat

Calculation S

Calculate ST

Life time mo

Internal pres

Internal pres

Internal pres

to internal pressure

es

esses

io*Mo]²+Mt²

de

EN 13480
FDBR
Stoomwezen D1101
AGFW FW401
AGFW - 1989
ASME B31.1
ASME B31.3
ASME B31.4
ASME B31.5
ASME B31.8
ISO 14692
BS7159
KRV
UKOOA (obsolete)
WAVISTRONG - Future Pipe (obsolete)
VGLSP - Equivalent stresses SIG-V
VGLSR - Equivalent stresses for pipes
ASME Class 1
ASME Class 2
ASME Class 3
KTA 3201.2
KTA 3211.2 A1
KTA 3211.2 A2/A3
Analysis of substructures acc. to ADS4

Text:

OK | Cancel | New | Delete | Save as sample | Load sample

Calculation output | Output of storing, loading ...

Ready!

Za
Ya Xa

ROHR2 31.0 beta - Dynamic - [I:\Schul+Präsentation\Tutorials\English\FESU\Tank_Torispherical-head_with_nozzle\Step_0\Step_0.r2w*]

File Edit Properties Loads Results Documentation View Isometry Options Extras Window Help SIGMA

F1 for Help | DN150.0 ST35.8 PA=16.0bar TA=200°C | 0, 0, 0

Input | Result | Isometry | DN150.0 | Betrieb | Lc | Tp

ROHR2 tasks - Stress analysis4

- Tasks
  - Load cases
  - Plot
  - Stress analysis
    - Spannungsanalys
    - Stress analysis4
  - Extreme value calculat
  - Federauslegung

Stress analysis | Superpositions | Equations | Region | Comment | Output file

Description: FESU

Input file: spann4.inp

Specification: EN 13480

System data from lc: Gewicht

Life time (Cr

enter l

Load cycles (sec. loads)

< 7000

Factor: 1

Settings

Create supe

Suppress se

Convert stre

Consider tole

Consider tole

Consider tole

Use alternat

Calculation S

Calculate ST

Life time mo

Internal pres

Internal pres

Internal pres

to internal pressure

es

esses

io*Mo]²+Mt²

de

Text:

FDBR
Stoomwezen D1101
AGFW FW401
AGFW - 1989
ASME B31.1
ASME B31.3
ASME B31.4
ASME B31.5
ASME B31.8
ISO 14692
BS7159
KRV
UKOOA (obsolete)
WAVISTRONG - Future Pipe (obsolete)
VGLSP - Equivalent stresses SIG-V
VGLSR - Equivalent stresses for pipes
ASME Class 1
ASME Class 2
ASME Class 3
KTA 3201.2
KTA 3211.2 A1
KTA 3211.2 A2/A3
Analysis of substructures acc. to ADS4
Analysis of substructures acc. to EN13445

select the stress analysis according to EN13445

OK | Cancel | New | Delete | Save as s

Calculation output | Output of storing, loading ...

Ready!

Za
Ya Xa

ROHR2 31.0 beta - Dynamic - [I:\Schul+Präsentation\Tutorials\English\FESU\Tank_Torispherical-head_with_nozzle\Step_0\Step_0.r2w*]

File Edit Properties Loads Results Documentation View Isometry Options Extras Window Help SIGMA

F1 for Help | DN150.0 ST35.8 PA=16.0bar TA=200°C | 0, 0, 0

Input | Result | Isometry | DN150.0 | Betrieb | Lc | Tp

ROHR2 tasks - Stress analysis4

- Tasks
  - Load cases
  - Plot
  - Stress analysis
    - Spannungsanalys
    - Stress analysis4
  - Extreme value calculat
  - Federauslegung

Stress analysis | Superpositions | Equations | Region | Comment | Output file

Description: FESU

Input file: spann4.inp

Specification: EN 13480

System data from lc: Gewicht

Life time (Cr

enter l

Load cycles (sec. loads)

< 7000

Factor: 1

Settings

Create supe

Suppress se

Convert stre

Consider tole

Consider tole

Consider tole

Use alternat

Calculation S

Calculate ST

Life time mo

Internal pres

Internal pres

Internal pres

to internal pressure

es

esses

de

FDBR
Stoomwezen D1101
AGFW FW401
AGFW - 1989
ASME B31.1
ASME B31.3
ASME B31.4
ASME B31.5
ASME B31.8
ISO 14692
BS7159
KRV
UKOOA (obsolete)
WAVISTRONG - Future Pipe (obsolete)
VGLSP - Equivalent stresses SIG-V
VGLSR - Equivalent stresses for pipes
ASME Class 1
ASME Class 2
ASME Class 3
KTA 3201.2
KTA 3211.2 A1
KTA 3211.2 A2/A3
Analysis of substructures acc. to ADS4
Analysis of substructures acc. to EN13445

Text:

OK | Cancel | New | Delete | Save as sample | Load sample

Calculation output | Output of storing, loading ...

Ready!

ROHR2 31.0 beta - Dynamic - [I:\Schul+Präsentation\Tutorials\English\FESU\Tank_Torispherical-head_with_nozzle\Step_0\Step_0.r2w*]

File Edit Properties Loads Results Documentation View Isometry Options Extras Window Help SIGMA

F1 for Help | DN150.0 ST35.8 PA=16.0bar TA=200°C | 0, 0, 0

Input | Result | Isometry | DN150.0 | Betrieb | Lc | Tp

ROHR2 tasks - Stress analysis4

- Tasks
  - Load cases
  - Plot
  - Stress analysis
    - Spannungsanalys
    - Stress analysis4
  - Extreme value calculat
  - Federauslegung

Stress analysis | Superpositions | Equations | Region | Comment | Output file

Description: FESU

Input file: spann4.inp

Specification: Analysis of substructures acc. to EN13

System data from lc: Gewicht

Life time (Creep range analysis)

enter life time: 200000 hours

Load cycles (sec. loads)

Factor: 1

Settings

- Create superpositions and equations automatically [x]
- Suppress secondary stress analysis S3 [ ]
- Consider corrosion with the calculation of the primary stresses [x]
- Consider mill tolerance with the calculation of the primary stresses [ ]
- Consider corrosion with the calculation of the secondary stresses [x]
- Consider mill tolerance with the calculation of the secondary stresses [ ]
- Determine maximum stresses instead of stress range [ ]
- Calculate stresses acc. to von Mises (GEH) (•)
- Calculate stresses acc. to Tresca (SSH) ( )

Text:

OK | Cancel | New | Delete | Save as sample | Load sample

Calculation output | Output of storing, loading ...

Ready!

Za Ya Xa

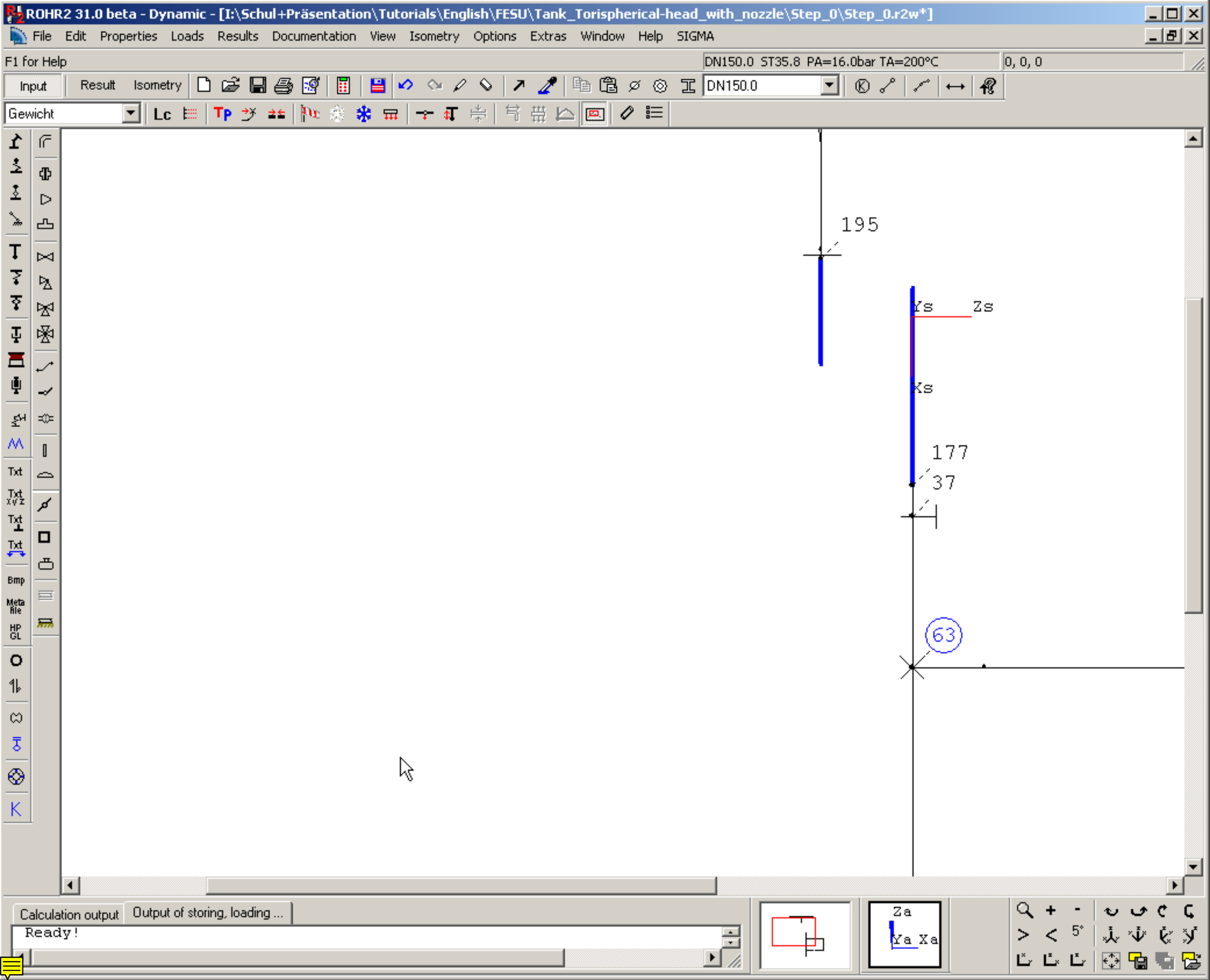
ROHR2 31.0 beta - Dynamic - [I:\Schul+Präsentation\Tutorials\English\FESU\Tank_Torispherical-head_with_nozzle\Step_0\Step_0.r2w*]
File Edit Properties Loads Results Documentation View Isometry Options Extras Window Help SIGMA
F1 for Help
DN150.0 ST35.8 PA=16.0bar TA=200°C
0, 0, 0
Input Result Isometry
DN150.0
Gewicht
195
Ys
Zs
Xs
177
37
63
Calculation output
Output of storing, loading ...
Ready!
Za
Ya Xa

ROHR2 31.0 beta - Dynamic - [I:\Schul+Präsentation\Tutorials\English\FESU\Tank_Torispherical-head_with_nozzle\Step_0\Step_0.r2w*]

File Edit Properties Loads Results Documentation View Isometry Options Extras Window Help SIGMA

F1 for Help

DN150.0 ST35.8 PA=16.0bar TA=200°C

0, 0, 0

Input Result Isometry

DN150.0

Gewicht

Lc

Run the calculation

195

Ys Zs

Xs

177

37

63

Calculation output

Output of storing, loading ...

Ready!

Za

Ya Xa

ROHR2 31.0 beta - Dynamic - [I:\Schul+Präsentation\Tutorials\English\FESU\Tank_Torispherical-head_with_nozzle\Step_0\Step_0.r2w*]

File Edit Properties Loads Results Documentation View Isometry Options Extras Window Help SIGMA

F1 for Help

DN150.0 ST35.8 PA=16.0bar TA=200°C

0, 0, 0

Input Result Isometry

DN150.0

Gewicht

Lc

Tp

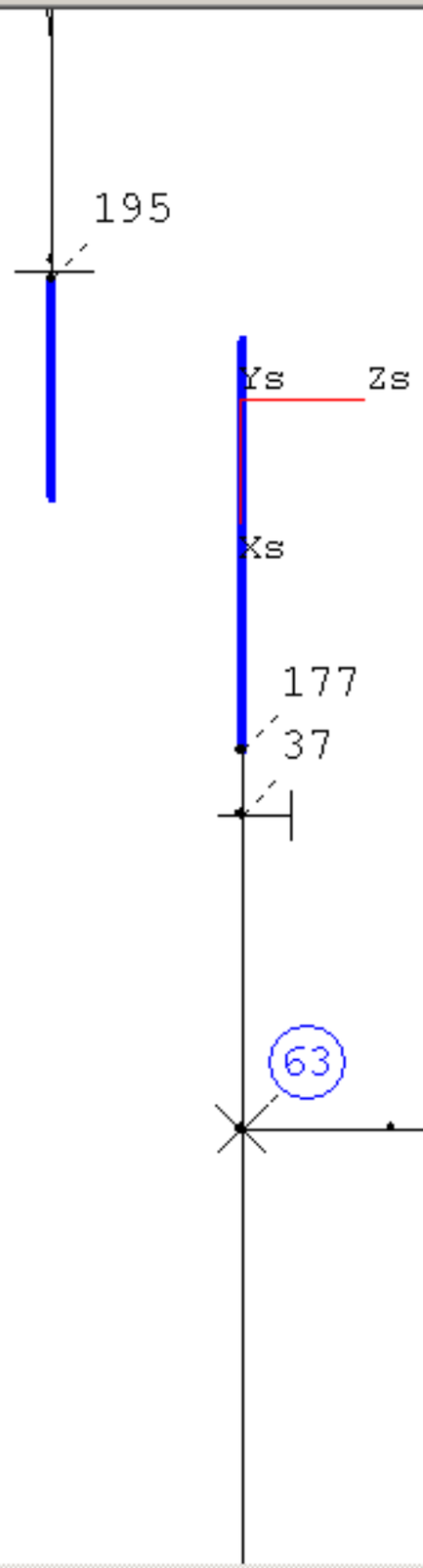

ROHR2 calculation

Select:

- Internal pressure check
- Checking collisions
- Federauslegung - Vorschätzung
- Gewicht
- Betrieb
- Federauslegung - Federtabelle
- Lagerbelastung
- Spannungsanalyse
- FESU
- Plot1

OK Cancel All

Calculation output | Output of storing, loading ...

Ready!

Za Ya Xa

ROHR2 31.0 beta - Dynamic - [I:\Schul+Präsentation\Tutorials\English\FESU\Tank_Torispherical-head_with_nozzle\Step_0\Step_0.r2w*]

File Edit Properties Loads Results Documentation View Isometry Options Extras Window Help SIGMA

F1 for Help

DN150.0 ST35.8 PA=16.0bar TA=200°C

0, 0, 0

Input Result Isometry

DN150.0

Gewicht

Lc

Tp

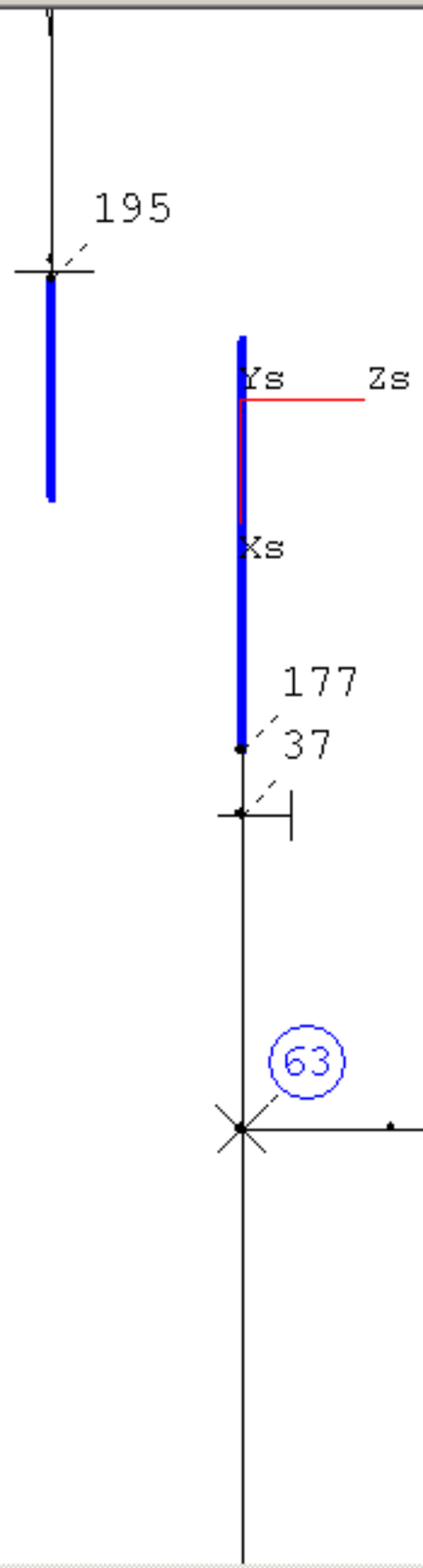

ROHR2 calculation

Select:

- Internal pressure check
- Checking collisions
- Federauslegung - Vorschätzung
- Gewicht
- Betrieb
- Federauslegung - Federtabelle
- Lagerbelastung
- Spannungsanalyse
- FESU
- Plot1

OK Cancel All

Calculation output | Output of storing, loading ...

Ready!

Za Ya Xa

ROHR2 31.0 beta - Dynamic - [I:\Schul+Präsentation\Tutorials\English\FESU\Tank_Torispherical-head_with_nozzle\Step_0\Step_0.r2w*]

File Edit Properties Loads Results Documentation View Isometry Options Extras Window Help SIGMA

F1 for Help

DN150.0 ST35.8 PA=16.0bar TA=200°C

0, 0, 0

Input Result Isometry

DN150.0

Gewicht

Lc

Tp

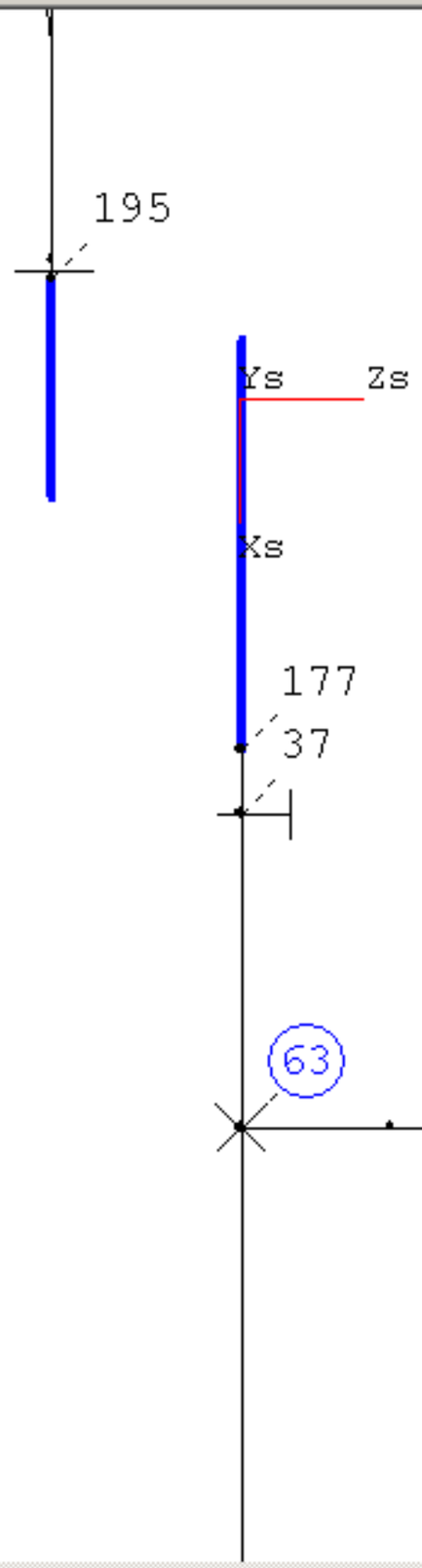

ROHR2 calculation

Select:

- Internal pressure check
- Checking collisions
- Federauslegung - Vorschätzung
- Gewicht
- Betrieb
- Federauslegung - Federtabelle
- Lagerbelastung
- Spannungsanalyse
- FESU
- Plot1

OK Cancel All

Calculation output | Output of storing, loading ...

Ready!

Za
Ya Xa

ROHR2 31.0 beta - Dynamic - [I:\Schul+Präsentation\Tutorials\English\FESU\Tank_Torispherical-head_with_nozzle\Step_0\Step_0.r2w*]

File Edit Properties Loads Results Documentation View Isometry Options Extras Window Help SIGMA

F1 for Help | DN150.0 ST35.8 PA=16.0bar TA=200°C | 0, 0, 0

Input | Result | Isometry | DN150.0 | Gewicht | Lc | Tp

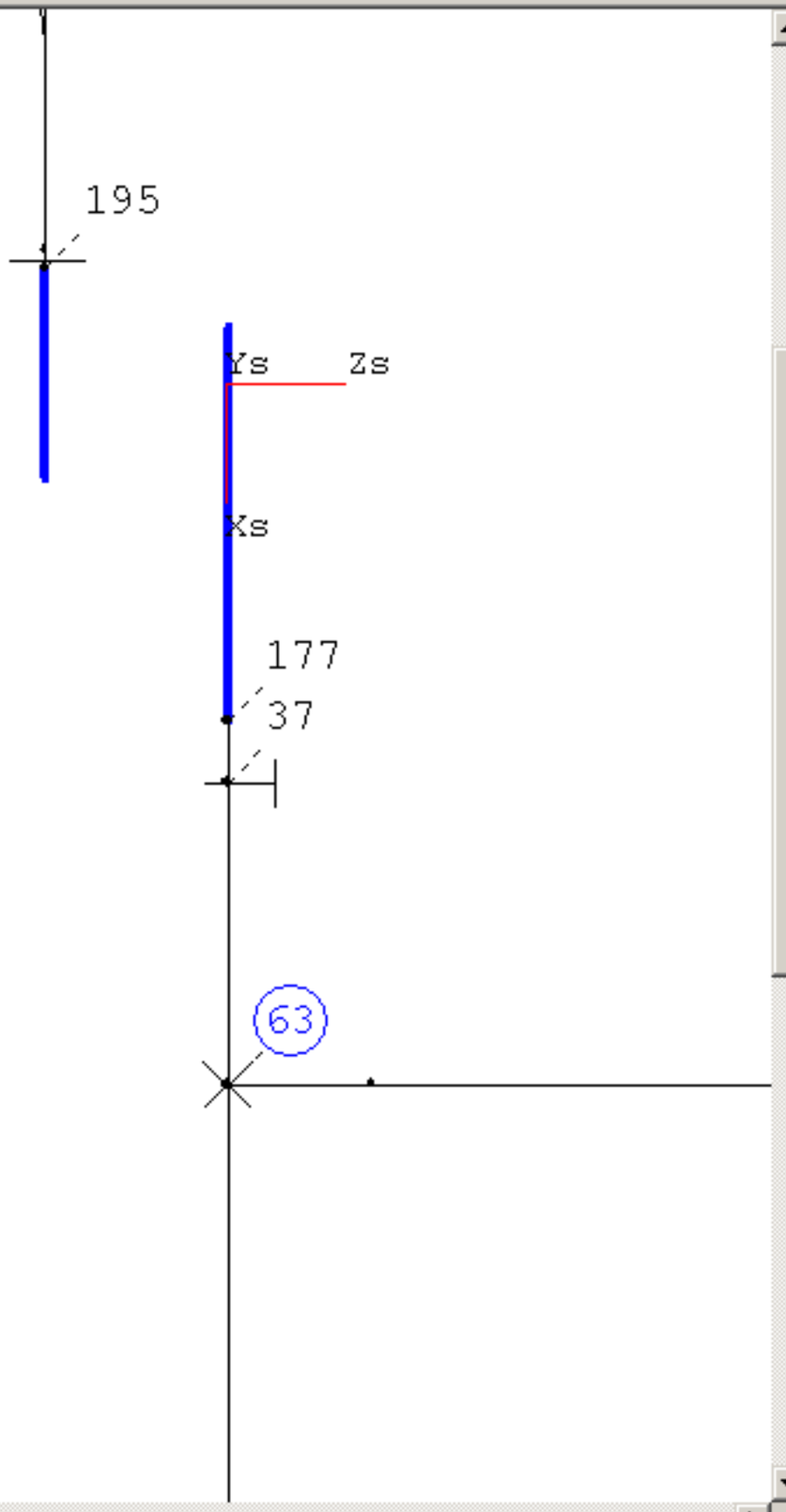

ROHR2 calculation

Select:

- Internal pressure check
- Checking collisions
- Federauslegung - Vorschätzung
- Gewicht
- Betrieb
- Federauslegung - Federtabelle
- Lagerbelastung
- Spannungsanalyse
- FESU
- Plot1

OK | Cancel | All

Calculation output | Output of storing, loading ...

Ready!

Za
Ya Xa

ROHR2 31.0 beta - Dynamic - [I:\Schul+Präsentation\Tutorials\English\FESU\Tank_Torispherical-head_with_nozzle\Step_0\Step_0.r2w]

File Edit Properties Loads Results Documentation View Isometry Options Extras Window Help SIGMA

F1 for Help

DN150.0 ST35.8 PA=16.0bar TA=200°C

0, 0, 0

Input Result Isometry

DN150.0

Gewicht

Lc

Tp

Calculation results - 23.11.2009 11:21:28 - 0 Errors, 2 Warnings, 0 Informations

- Internal pressure check ...
  - 0 Errors
  - 2 Warnings
    - Internal pressure analysis tee node 41, dimension DN2200.0/DN300.0: Utiliz
    - Please make a detailed internal pressure analysis!
  - 0 Informations
- Checking collisions ...
- Checking boundary conditions ...
- SUB_2
- Save data ...
- Federauslegung - Vorschätzung
- Gewicht
- Betrieb
- Federauslegung - Federtabelle
- Lagerbelastung
- Spannungsanalyse
- FESU
- Plotl
- Checking boundary conditions

Close | Help for message | Save | Print

001
SUB_2

Calculation output | Output of storing, loading ...

Ready!

Za
Ya Xa

ROHR2 31.0 beta - Dynamic - [I:\Schul+Präsentation\Tutorials\English\FESU\Tank_Torispherical-head_with_nozzle\Step_0\Step_0.r2w]

File Edit Properties Loads Results Documentation View Isometry Options Extras Window Help SIGMA

F1 for Help | DN150.0 ST35.8 PA=16.0bar TA=200°C | 0, 0, 0

Input | Result | Isometry | DN150.0 | Gewicht | Lc | Tp

Calculation results - 23.11.2009 11:21:28 - 0 Errors, 2 Warnings, 0 Informations

- Internal pressure check ...
  - 0 Errors
  - 2 Warnings
    - Internal pressure analysis tee node 41, dimension DN2200.0/DN300.0: Utiliz
    - Please make a detailed internal pressure analysis!
  - 0 Informations
- Checking collisions ...
- Checking boundary conditions ...
- SUB_2
- Save data ...
- Federauslegung - Vorschätzung
- Gewicht
- Betrieb
- Federauslegung - Federtabelle
- Lagerbelastung
- Spannungsanalyse
- FESU
- Plotl
- Checking boundary conditions

Close | Help for message | Save | Print

001
SUB_2

Calculation output | Output of storing, loading ...

Ready!

Za
Ya Xa

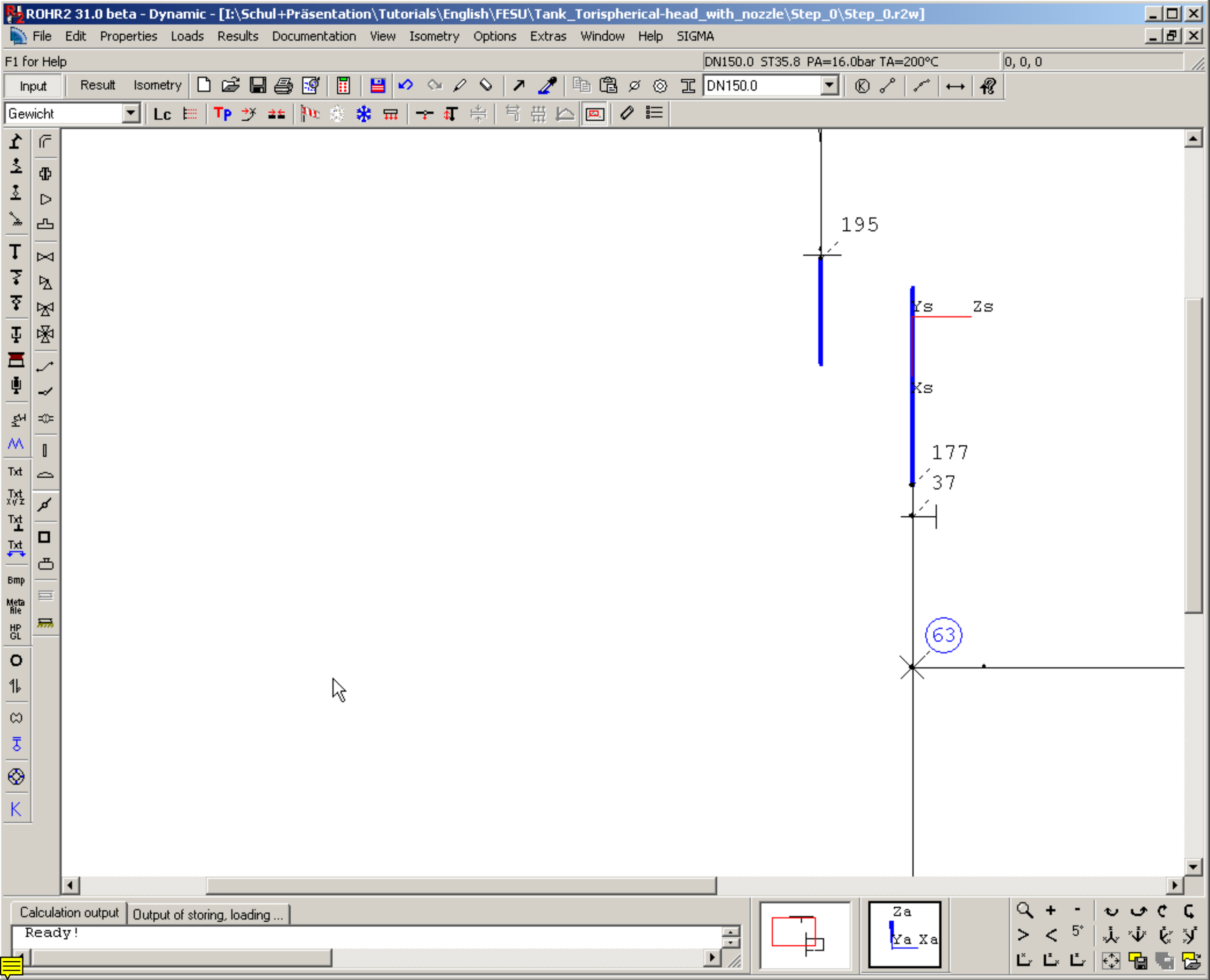
ROHR2 31.0 beta - Dynamic - [I:\Schul+Präsentation\Tutorials\English\FESU\Tank_Torispherical-head_with_nozzle\Step_0\Step_0.r2w]
File Edit Properties Loads Results Documentation View Isometry Options Extras Window Help SIGMA
F1 for Help
DN150.0 ST35.8 PA=16.0bar TA=200°C
0, 0, 0
Input Result Isometry
DN150.0
Gewicht
Lc
195
Ys
Zs
Xs
177
37
63
Calculation output
Output of storing, loading ...
Ready!
Za
Ya Xa

ROHR2 31.0 beta - Dynamic - [I:\Schul+Präsentation\Tutorials\English\FESU\Tank_Torispherical-head_with_nozzle\Step_0\Step_0.r2w]

File Edit Properties Loads Results Documentation View Isometry Options Extras Window Help SIGMA

F1 for Help

DN150.0 ST35.8 PA=16.0bar TA=200°C

0, 0, 0

Input Result Isometry

DN150.0

Gewicht

Lc

Txt Txt Txt Bmp Meta file HP GL

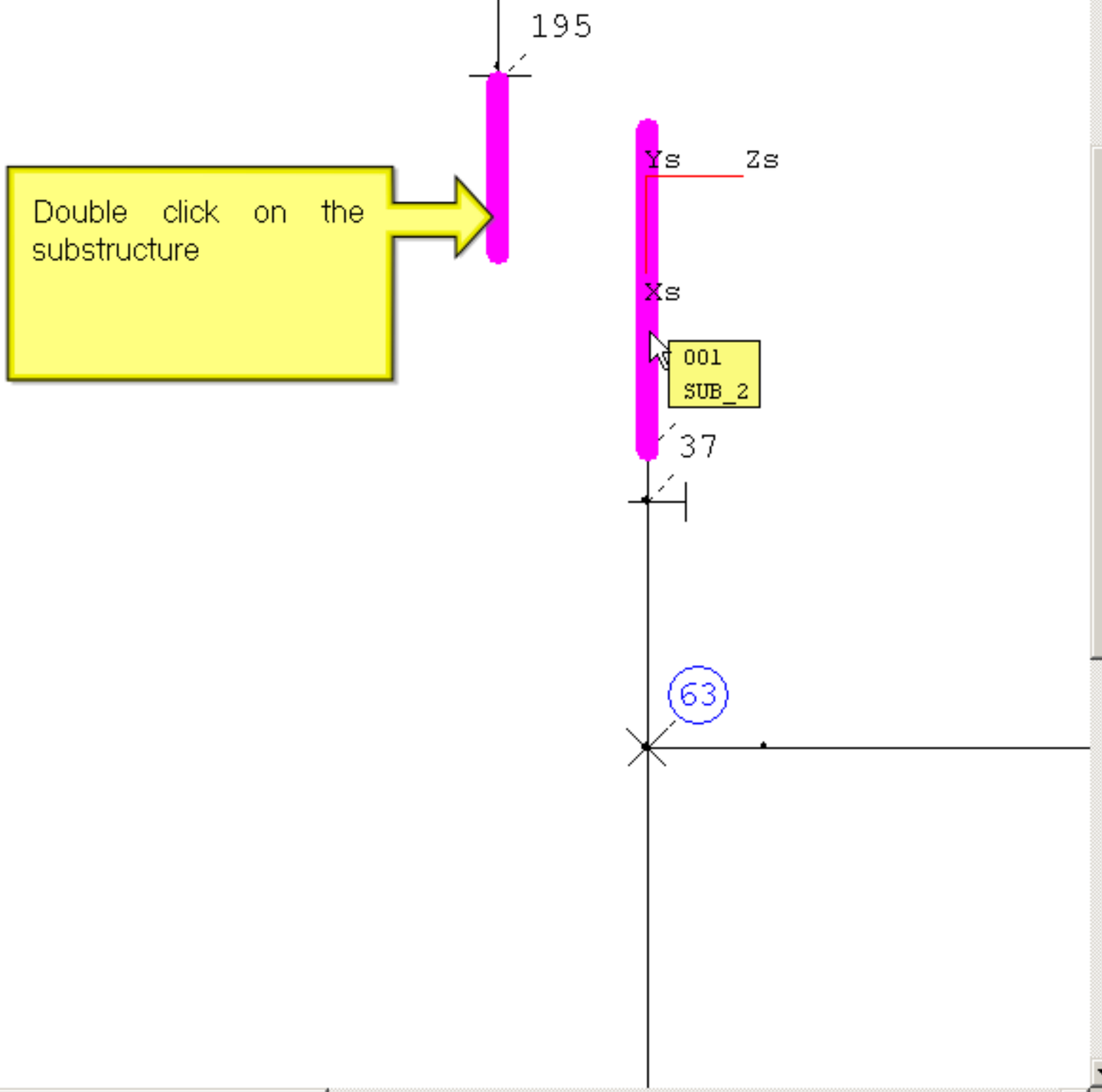

Calculation output | Output of storing, loading ...

Ready!

Za
Ya Xa

ROHR2 31.0 beta - Dynamic - [I:\Schul+Präsentation\Tutorials\English\FESU\Tank_Torispherical-head_with_nozzle\Step_0\Step_0.r2w]

File Edit Properties Loads Results Documentation View Isometry Options Extras Window Help SIGMA

F1 for Help

DN150.0 ST35.8 PA=16.0bar TA=200°C

0, 0, 0

Input Result Isometry

DN150.0

Gewicht

Lc

Tp

Element

FE Substructure | Operation data | Loads

ROHR2 structure name: 001

Name of the substructure: SUB_2

Show/Edit

Description:

OK Abbrechen Übernehmen Hilfe

195

Ys Zs

Xs

177

37

63

Calculation output | Output of storing, loading ...

Ready!

Za

Ya Xa

ROHR2 31.0 beta - Dynamic - [I:\Schul+Präsentation\Tutorials\English\FESU\Tank_Torispherical-head_with_nozzle\Step_0\Step_0.r2w]

File Edit Properties Loads Results Documentation View Isometry Options Extras Window Help SIGMA

F1 for Help

DN150.0 ST35.8 PA=16.0bar TA=200°C

0, 0, 0

Input Result Isometry

DN150.0

Gewicht

Lc

Tp

Element

FE Substructure | Operation data | Loads

ROHR2 structure name: 001

Name of the substructure: SUB_2

Show/Edit

Description:

OK Abbrechen Übernehmen Hilfe

195

Ys Zs

Xs

177

37

63

Calculation output | Output of storing, loading ...

Ready!

Za

Ya Xa

ROHR2 31.0 beta - FESU - [I:\Schul+Präsentation\Tutorials\English\FESU\Tank_Torispherical-head_with_nozzle\Step_0\sub_001.r2fesu]

File Edit Properties Results Documentation View Options Window Help

Result mode

PA=0.0bar TA=0°C

0, 0, 0

Input Model Result

Click on the Result button to see them

Txt

Txt

Txt

Bmp

Meta file

HP GL

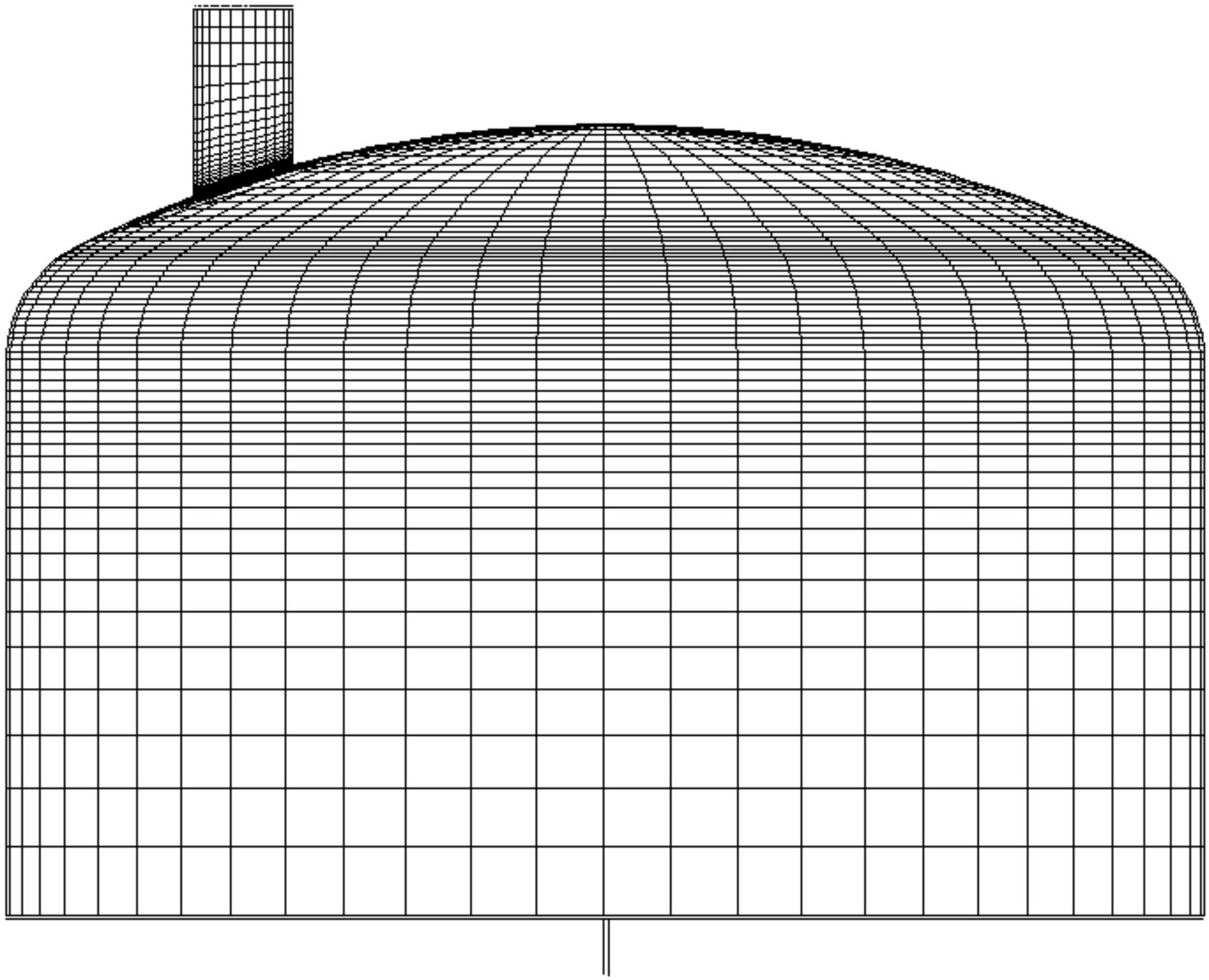

Calculation output

Output of storing, loading ...

Za

Ya Xa

5°

ROHR2 31.0 beta - FESU - [I:\Schul+Präsentation\Tutorials\English\FESU\Tank_Torispherical-head_with_nozzle\Step_0\sub_001.r2fesu]

File Edit Properties Results Documentation View Options Window Help

F1 for Help

PA=0.0bar TA=0°C

0, 0, 0

FESU - SPM - 00 (Primärlasten) - (Gewicht)
FESU - SPL - 01 (Primärlasten) - (Gewicht)
FESU - SP - 02 (Primärlasten) - (Gewicht)
FESU - SPQ - 03 (Betrieb) - (Betrieb)
Gewicht
Betrieb
P_10bar
10_EBx
10_EBy
10_Ebz
T_1mm/m
dT_1mm/m
QX_P2
QY_P2
QZ_P2
MX_P2
MY_P2
MZ_P2

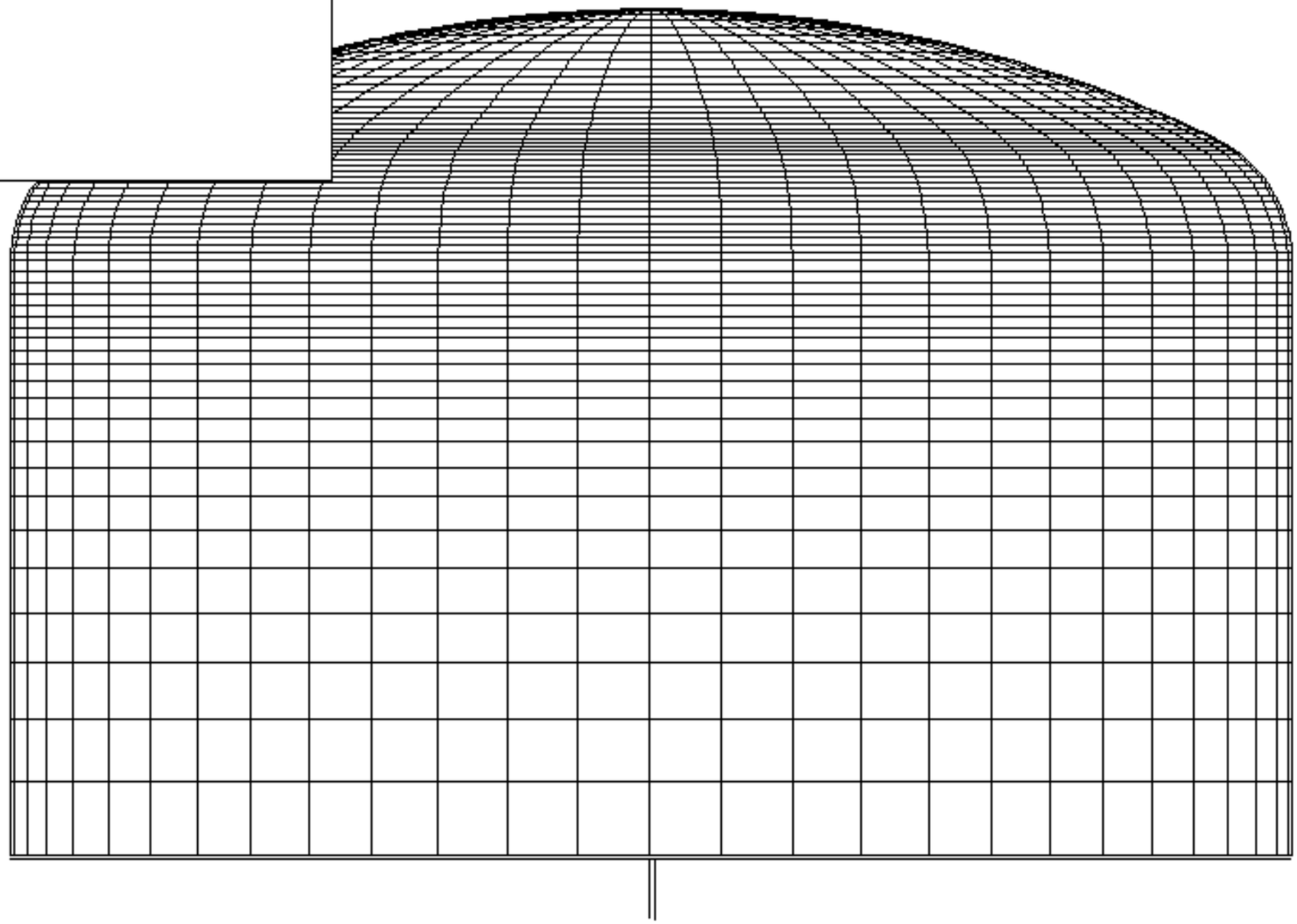

Calculation output | Output of storing, loading ...

Za
Ya Xa

ROHR2 31.0 beta - FESU - [I:\Schul+Präsentation\Tutorials\English\FESU\Tank_Torispherical-head_with_nozzle\Step_0\sub_001.r2fesu]

File Edit Properties Results Documentation View Options Window Help

F1 for Help

PA=0.0bar TA=0°C

0, 0, 0

FESU - SPM - 00 (Primärlasten) -

FESU - SPM - 00 (Primärlasten) - (Gewicht)
FESU - SPL - 01 (Primärlasten) - (Gewicht)
FESU - SP - 02 (Primärlasten) - (Gewicht)
FESU - SPQ - 03 (Betrieb) - (Betrieb)
Gewicht
Betrieb
P_10bar
10_EBx
10_EBy
10_Ebz
T_1mm/m
dT_1mm/m
QX_P2
QY_P2
QZ_P2
MX_P2
MY_P2
MZ_P2

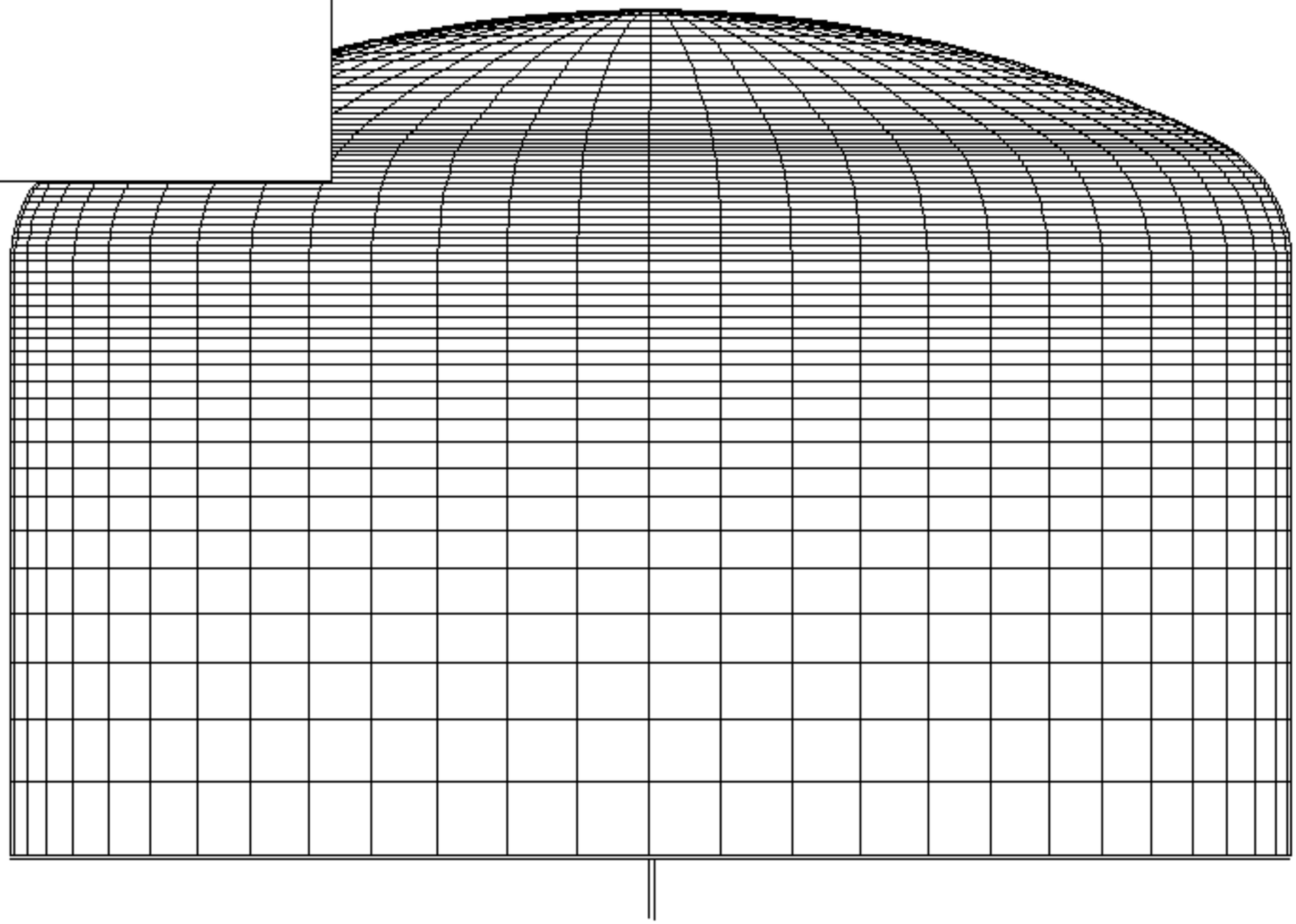

Calculation output | Output of storing, loading ...

Za
Ya Xa

ROHR2 31.0 beta - FESU - [I:\Schul+Präsentation\Tutorials\English\FESU\Tank_Torispherical-head_with_nozzle\Step_0\sub_001.r2fesu*]

File Edit Properties Results Documentation View Options Window Help

Coordinate system 2 | 01.01.1970 01:00:00 | 0, 0, 0

FESU - SPM - 00 (Primärlasten) - | SPM = S(Pm) < 1.0 | Ausn.

Input Model Result

Txt Txt Txt Bmp Meta file HP GL

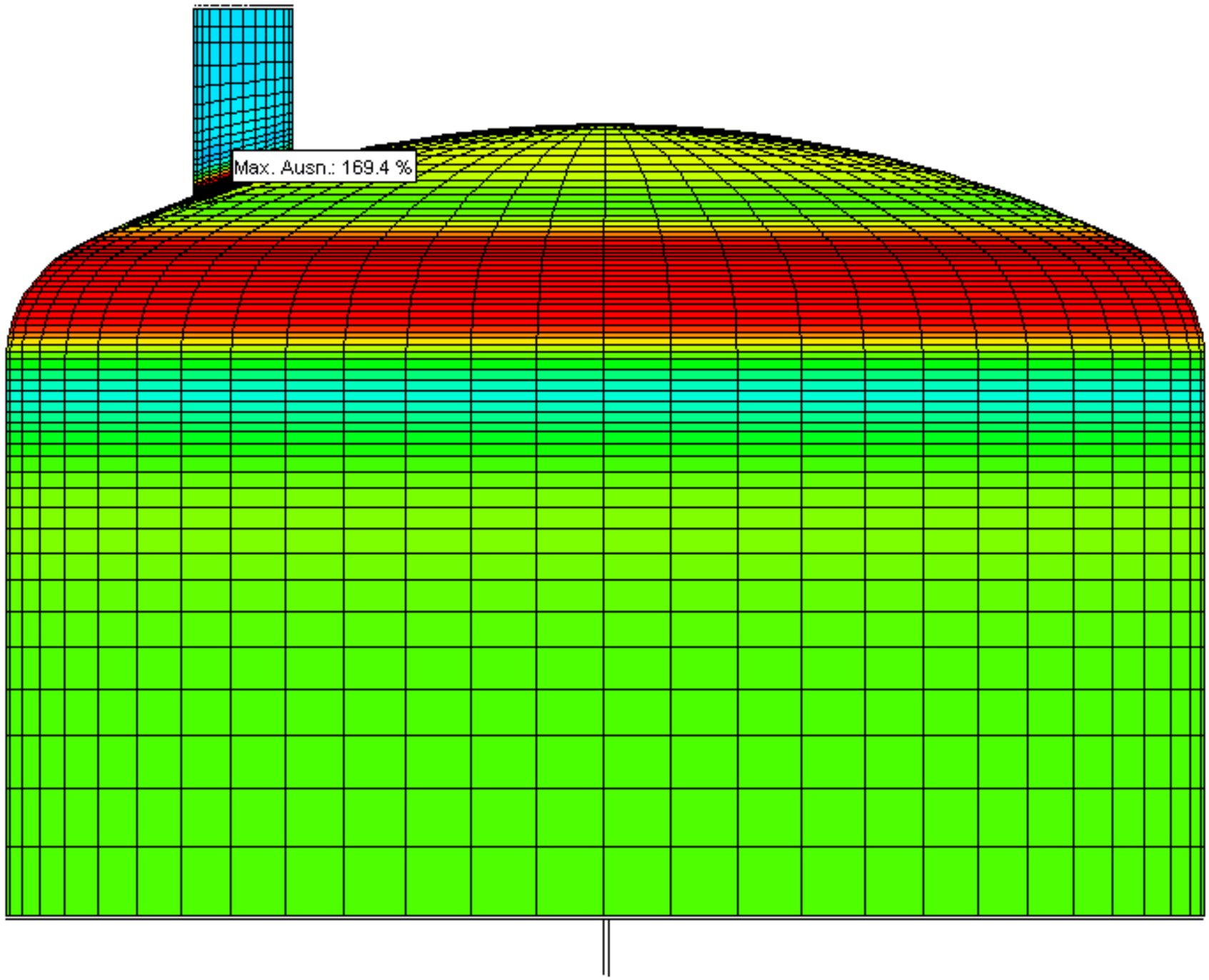

Calculation output | Output of storing, loading ...

Za Ya Xa

ROHR2 31.0 beta - FESU - [I:\Schul+Präsentation\Tutorials\English\FESU\Tank_Torispherical-head_with_nozzle\Step_0\sub_001.r2fesu*]

File Edit Properties Results Documentation View Options Window Help

Coordinate system 2 | 01.01.1970 01:00:00 | 0, 0, 0

FESU - SPM - 00 (Primärlasten) - | SPM = S(Pm) < 1.0 | Ausn.

Input Model Result

Txt Txt Txt Bmp Meta file HP GL

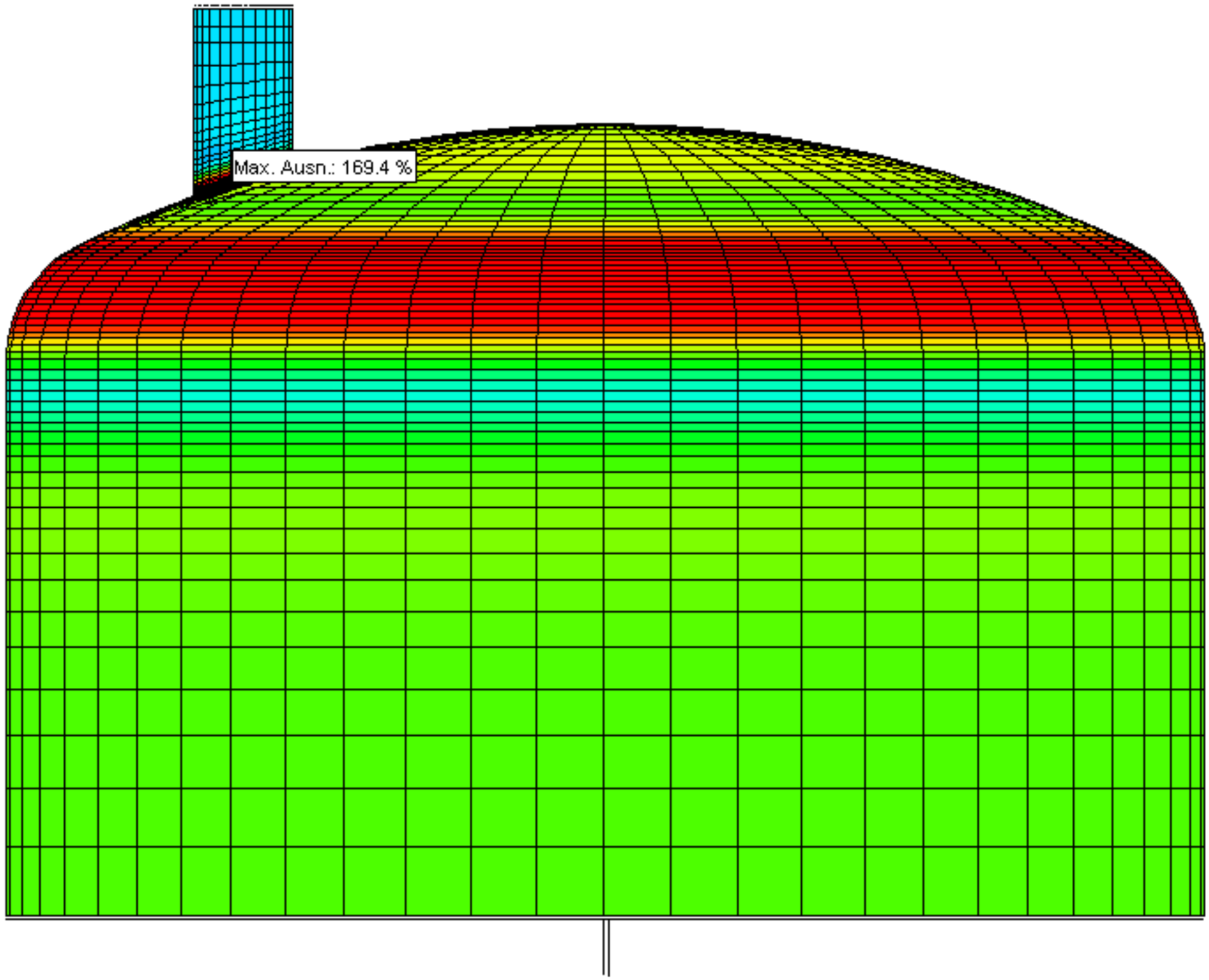

Calculation output | Output of storing, loading ...

Za Ya Xa

ROHR2 31.0 beta - FESU - [I:\Schul+Präsentation\Tutorials\English\FESU\Tank_Torispherical-head_with_nozzle\Step_0\sub_001.r2fesu*]

File Edit Properties Results Documentation View Options Window Help

F1 for Help

01.01.1970 01:00:00

0, 0, 0

FESU - SPM - 00 (Primärlasten) -

SPM = S(Pm) < 1.C

Ausn.

Input Model Result

Txt Txt Txt Bmp Meta file HP GL

Max. Ausn.: 169.4 %

Calculation output Output of storing, loading ...

ROHR2 31.0 beta - FESU - [I:\Schul+Präsentation\Tutorials\English\FESU\Tank_Torispherical-head_with_nozzle\Step_0\sub_001.r2fesu*]

File Edit Properties Results Documentation View Options Window Help

F1 for Help

01.01.1970 01:00:00

0, 0, 0

FESU - SPM - 00 (Primärlasten) -

SPM = S(Pm) < 1.C

Ausn.

Input Model Result

Txt Txt Txt Bmp Meta file HP GL

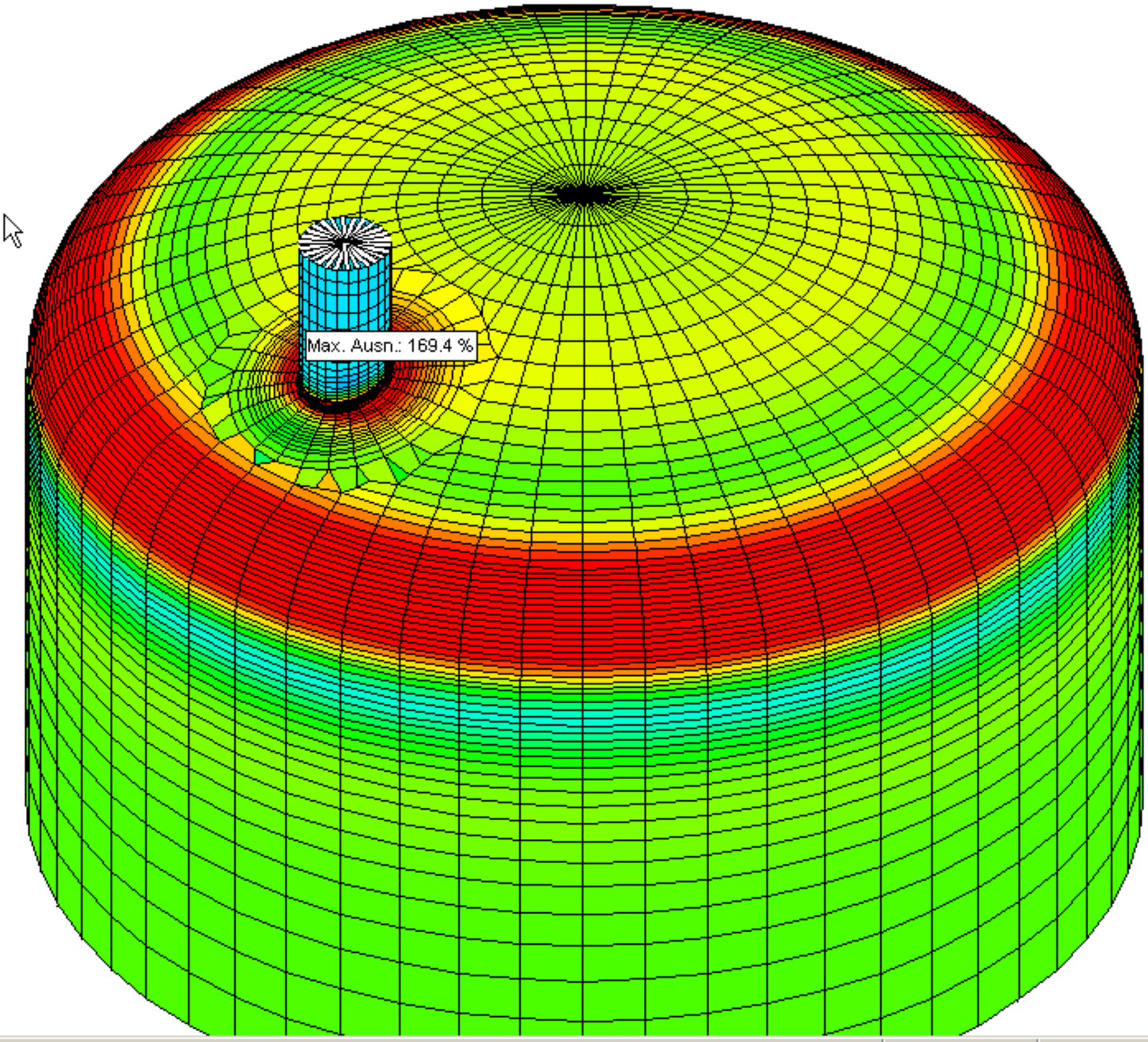

Calculation output Output of storing, loading ...

Za Xa Ya

ROHR2 31.0 beta - FESU - [I:\Schul+Präsentation\Tutorials\English\FESU\Tank_Torispherical-head_with_nozzle\Step_0\sub_001.r2fesu*]

File Edit Properties Results Documentation View Options Window Help

F1 for Help

01.01.1970 01:00:00

0, 0, 0

FESU - SPM - 00 (Primärlasten) -

SPM = S(Pm) < 1.C

Ausn.

Input Model Result

Txt Txt Txt Bmp Meta file HP GL

Max. Ausn.: 169.4 %

Calculation output Output of storing, loading ...

Za Xa

ROHR2 31.0 beta - FESU - [I:\Schul+Präsentation\Tutorials\English\FESU\Tank_Torispherical-head_with_nozzle\Step_0\sub_001.r2fesu*]

File Edit Properties Results Documentation View Options Window Help

F1 for Help | 01.01.1970 01:00:00 | 0, 0, 0

FESU - SPM - 00 (Primärlasten) - | SPM = S(Pm) < 1.0 | Ausn.

Input Model Result

Txt Txt Txt Bmp Meta file HP GL

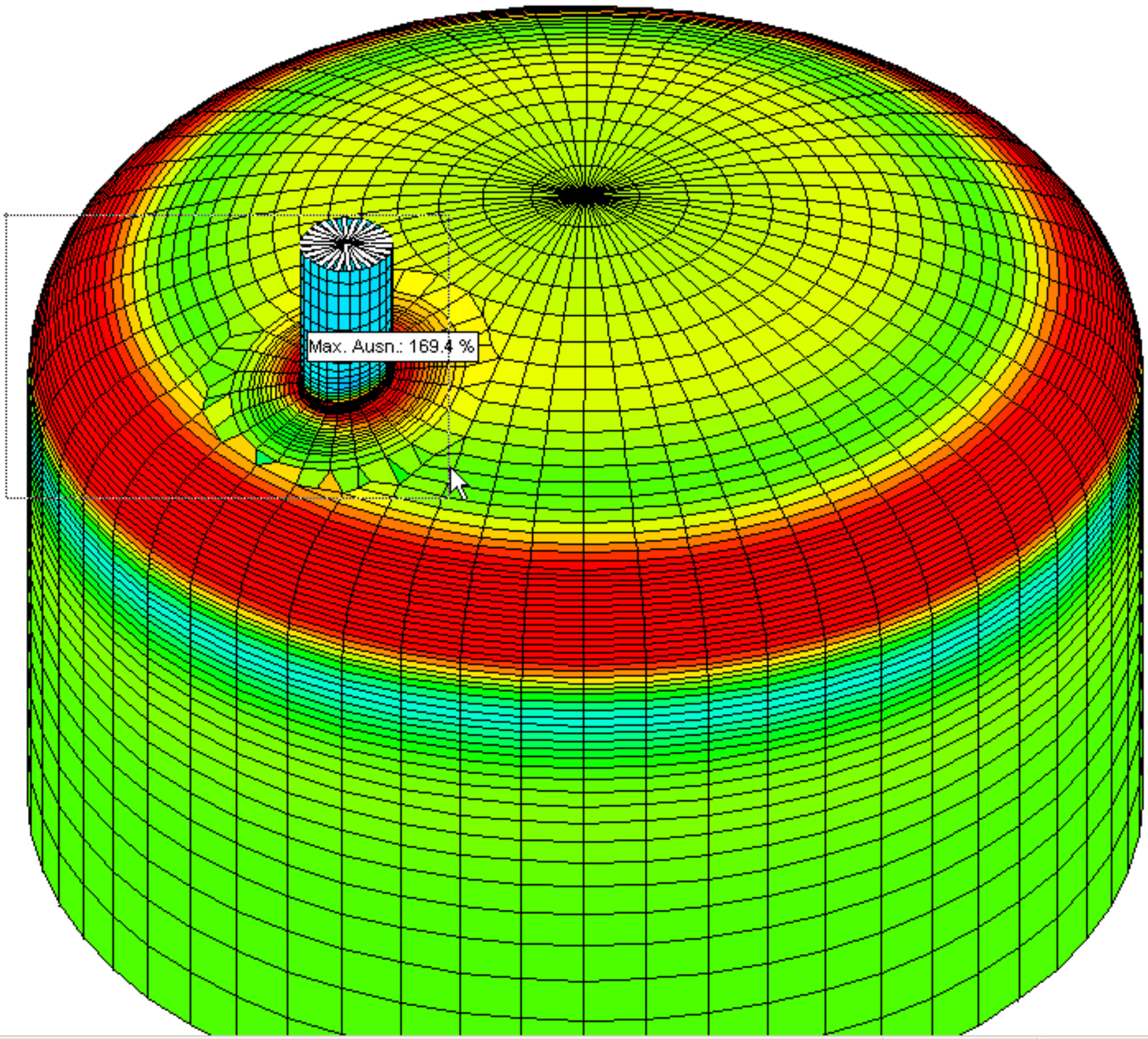

Calculation output | Output of storing, loading ...

Za Xa Xa

ROHR2 31.0 beta - FESU - [I:\Schul+Präsentation\Tutorials\English\FESU\Tank_Torispherical-head_with_nozzle\Step_0\sub_001.r2fesu*]

File Edit Properties Results Documentation View Options Window Help

F1 for Help | 01.01.1970 01:00:00 | 0, 0, 0

FESU - SPM - 00 (Primärlasten) - | SPM = S(Pm) < 1.0 | Ausn.

Input Model Result

Txt Txt Txt Bmp Meta file HP GL

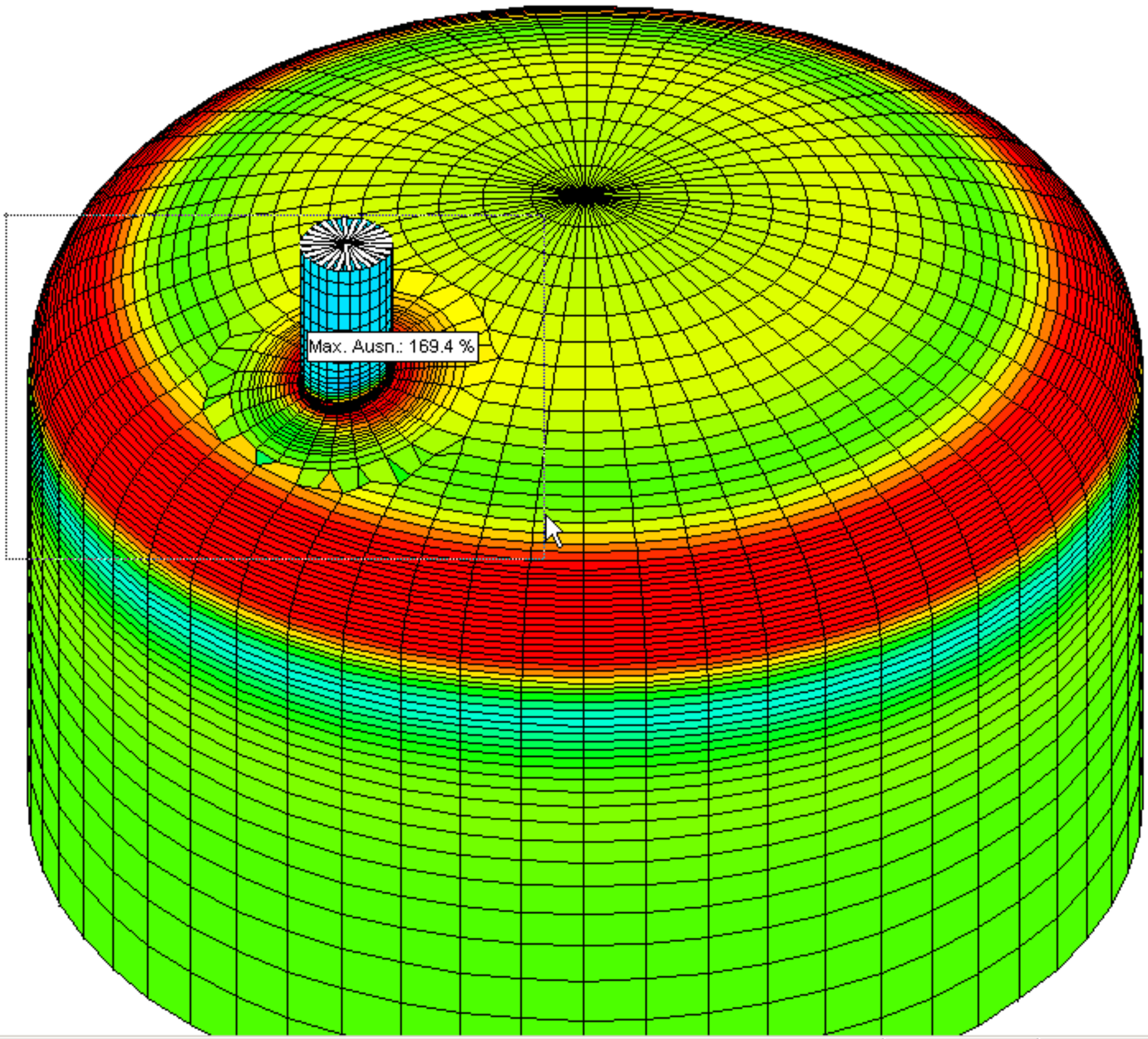

Calculation output | Output of storing, loading ...

Za Xa Xa

ROHR2 31.0 beta - FESU - [I:\Schul+Präsentation\Tutorials\English\FESU\Tank_Torispherical-head_with_nozzle\Step_0\sub_001.r2fesu*]

File Edit Properties Results Documentation View Options Window Help

F1 for Help | 01.01.1970 01:00:00 | 0, 0, 0

FESU - SPM - 00 (Primärlasten) - | SPM = S(Pm) < 1.0 | Ausn.

Input Model Result

Txt Txt Txt Bmp Meta file HP GL

Max. Ausn.: 169.4 %

Calculation output | Output of storing, loading ...

ROHR2 31.0 beta - FESU - [I:\Schul+Präsentation\Tutorials\English\FESU\Tank_Torispherical-head_with_nozzle\Step_0\sub_001.r2fesu*]

File Edit Properties Results Documentation View Options Window Help

F1 for Help | 01.01.1970 01:00:00 | 0, 0, 0

FESU - SPM - 00 (Primärlasten) - | SPM = S(Pm) < 1.0 | Ausn.

Input Model Result

Txt Txt Txt Bmp Meta file HP GL

Element 2931
Thickness: 20.00 mm
Ausn.: 68.9 %
Qxx: 1617.5 N/mm Qyy: 1655.4 N/mm Qxy: 9.7 N/mm
Mxx: 1219.4 Nmm/mm Myy: 3248.9 Nmm/mm Mxy: -41.2 Nmm/mm

Max. Ausn.: 169.4 %

Calculation output | Output of storing, loading ...

ROHR2 31.0 beta - FESU - [I:\Schul+Präsentation\Tutorials\English\FESU\Tank_Torispherical-head_with_nozzle\Step_0\sub_001.r2fesu*]

File Edit Properties Results Documentation View Options Window Help

01.01.1970 01:00:00 | 0, 0, 0

FESU - SPM - 00 (Primärlasten) - | SPM = S(Pm) < 1.0 | Ausn.

S(rr)
S(xx)
S(yy)
S(xy)
S(Pm)
Ausn.

Input Model Result

Txt Txt Txt Bmp Meta file HP GL

t 2931
ess: 20.00 mm
Ausn.: 68.9 %
Qxx: 1617.5 N/mm Qyy: 1655.4 N/mm Qxy: 9.7 N/mm
Mxx: 1219.4 Nmm/mm Myy: 3248.9 Nmm/mm Mxy: -41.2 Nmm/mm

Max. Ausn.: 169.4 %

Calculation output | Output of storing, loading ...

Ya Za Xa

ROHR2 31.0 beta - FESU - [I:\Schul+Präsentation\Tutorials\English\FESU\Tank_Torispherical-head_with_nozzle\Step_0\sub_001.r2fesu*]

File Edit Properties Results Documentation View Options Window Help

F1 for Help

01.01.1970 01:00:00

0, 0, 0

FESU - SPM - 00 (Primärlasten) -

SPM = S(Pm) < 1.0

Ausn.

S(rr)
S(xx)
S(yy)
S(xy)
S(Pm)
Ausn.

Input Model Result

Txt Txt Txt Bmp Meta file HP GL

t 2931
ess: 20.00 mm
Ausn.: 68.9 %
Qxx: 1617.5 N/mm Qyy: 1655.4 N/mm Qxy: 9.7 N/mm
Mxx: 1219.4 Nmm/mm Myy: 3248.9 Nmm/mm Mxy: -41.2 Nmm/mm

Max. Ausn.: 169.4 %

Calculation output | Output of storing, loading ...

Ya Za Xa

ROHR2 31.0 beta - FESU - [I:\Schul+Präsentation\Tutorials\English\FESU\Tank_Torispherical-head_with_nozzle\Step_0\sub_001.r2fesu*]

File Edit Properties Results Documentation View Options Window Help

F1 for Help | 01.01.1970 01:00:00 | 0, 0, 0

FESU - SPM - 00 (Primärlasten) - | SPM = S(Pm) < 1.0 | S(Pm)

Input Model Result

Txt Txt Txt Bmp Meta file HP GL

Element 2883
Thickness: 20.00 mm
S(Pm): 78.6 N/mm²
Qxx: 1444.6 N/mm Qyy: 1648.6 N/mm Qxy: 10.1 N/mm
Mxx: 1717.4 Nmm/mm Myy: 4164.6 Nmm/mm Mxy: -31.0 Nmm/mm

Max. S(Pm): 203.3 N/mm²

Calculation output | Output of storing, loading ...

ROHR2 31.0 beta - FESU - [I:\Schul+Präsentation\Tutorials\English\FESU\Tank_Torispherical-head_with_nozzle\Step_0\sub_001.r2fesu*]

File Edit Properties Results Documentation View Options Window Help

Set optimal window for the displayed system

01.01.1970 01:00:00

0, 0, 0

FESU - SPM - 00 (Primärlasten) -

SPM = S(Pm) < 1.0

S(Pm)

Input Model Result

Txt Txt Txt Bmp Meta file HP GL

Max. S(Pm): 203.3 N/mm²

Element 2314
Thickness: 20.00 mm
S(Pm): 129.4 N/mm²
Qxx: -1763.5 N/mm Qyy: 1209.7 N/mm Qxy: -13.4 N/mm
Mxx: -1349.2 Nmm/mm Myy: -7593.1 Nmm/mm Mxy: 96.2 Nmm/mm

Calculation output | Output of storing, loading ...

Za Ya Xa

ROHR2 31.0 beta - FESU - [I:\Schul+Präsentation\Tutorials\English\FESU\Tank_Torispherical-head_with_nozzle\Step_0\sub_001.r2fesu*]

File Edit Properties Results Documentation View Options Window Help

Set optimal window for the displayed system

01.01.1970 01:00:00

0, 0, 0

FESU - SPM - 00 (Primärlasten) -

SPM = S(Pm) < 1.0

S(Pm)

Input Model Result

Txt Txt Txt Bmp Meta file HP GL

Max. S(Pm): 203.3 N/mm²

Element 2314
Thickness: 20.00 mm
S(Pm): 129.4 N/mm²
Qxx: -1763.5 N/mm Qyy: 1209.7 N/mm Qxy: -13.4 N/mm
Mxx: -1349.2 Nmm/mm Myy: -7593.1 Nmm/mm Mxy: 96.2 Nmm/mm

Calculation output | Output of storing, loading ...

Za Ya Xa

ROHR2 31.0 beta - FESU - [I:\Schul+Präsentation\Tutorials\English\FESU\Tank_Torispherical-head_with_nozzle\Step_0\sub_001.r2fesu*]

File Edit Properties Results Documentation View Options Window Help

F1 for Help

01.01.1970 01:00:00

0, 0, 0

FESU - SPM - 00 (Primärlasten) -

SPM = S(Pm) < 1.0

S(Pm)

Input Model Result

Txt Txt Txt Bmp Meta file HP GL

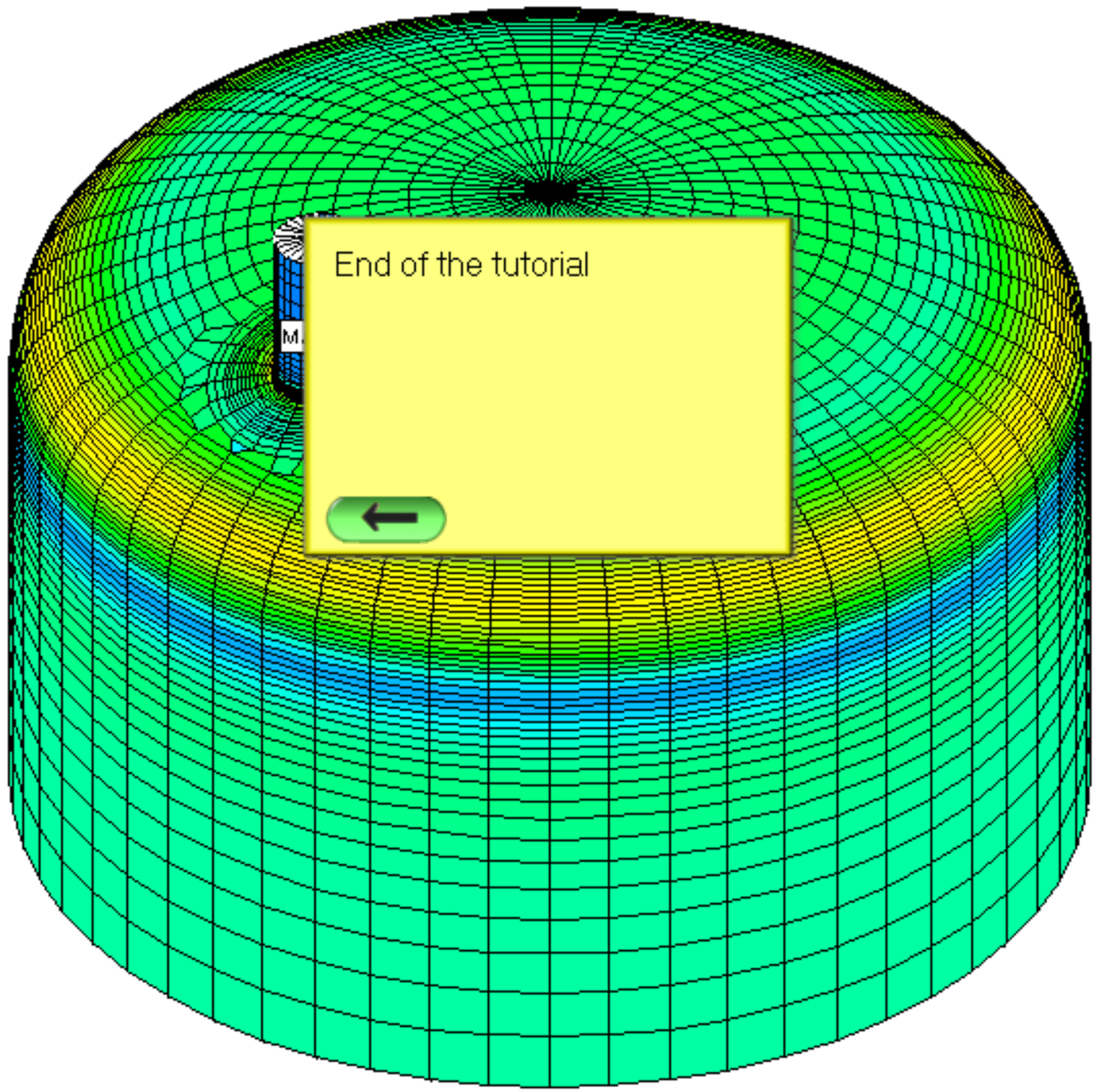

Calculation output Output of storing, loading ...

Za Ya Xa